Wood is Good:
Informing Wood Architecture Through the Investigation of Craft in Furniture

By

Daniel Rodrigues

A thesis submitted in partial fulfillment
of the requirement for the degree of
Master of Architecture (M.Arch)

The Faculty of Graduate Studies
Laurentian University
Sudbury, Ontario, Canada

THESIS DEFENCE COMMITTEE/COMITÉ DE SOUTENANCE DE THÈSE
Laurentian University/Université Laurentienne
Office of Graduate Studies/Bureau des études supérieures

Title of Thesis Titre de la thèse	Wood is Good: Informing Wood Architecture Through the Investigation of Craft in Furniture		
Name of Candidate Nom du candidat	Rodrigues, Daniel		
Degree Diplôme	Master of Architecture (M.Arch)		
Department/Program Département/Programme	Architecture	Date of Defence Date de la soutenance	April 8, 2022

APPROVED/APPROUVÉ

Thesis Examiners/Examinateurs de thèse:

Randall Kober
(Thesis Advisor / Directeur(trice) de thèse)

Murray Rochon
(Thesis Second Reader / Deuxième lecteur(trice) de thèse)

Carol Phillips
(External Examiner / Examinateur(trice) externe)

Approved for the Office of Graduate Studies
Approuvé pour le Bureau des études supérieures
Tammy Eger, PhD
Vice-President, Research (Office of Graduate Studies)
Vice-rectrice à la recherche (Bureau des études supérieures)

ACCESSIBILITY CLAUSE AND PERMISSION TO USE

Figure 0.01

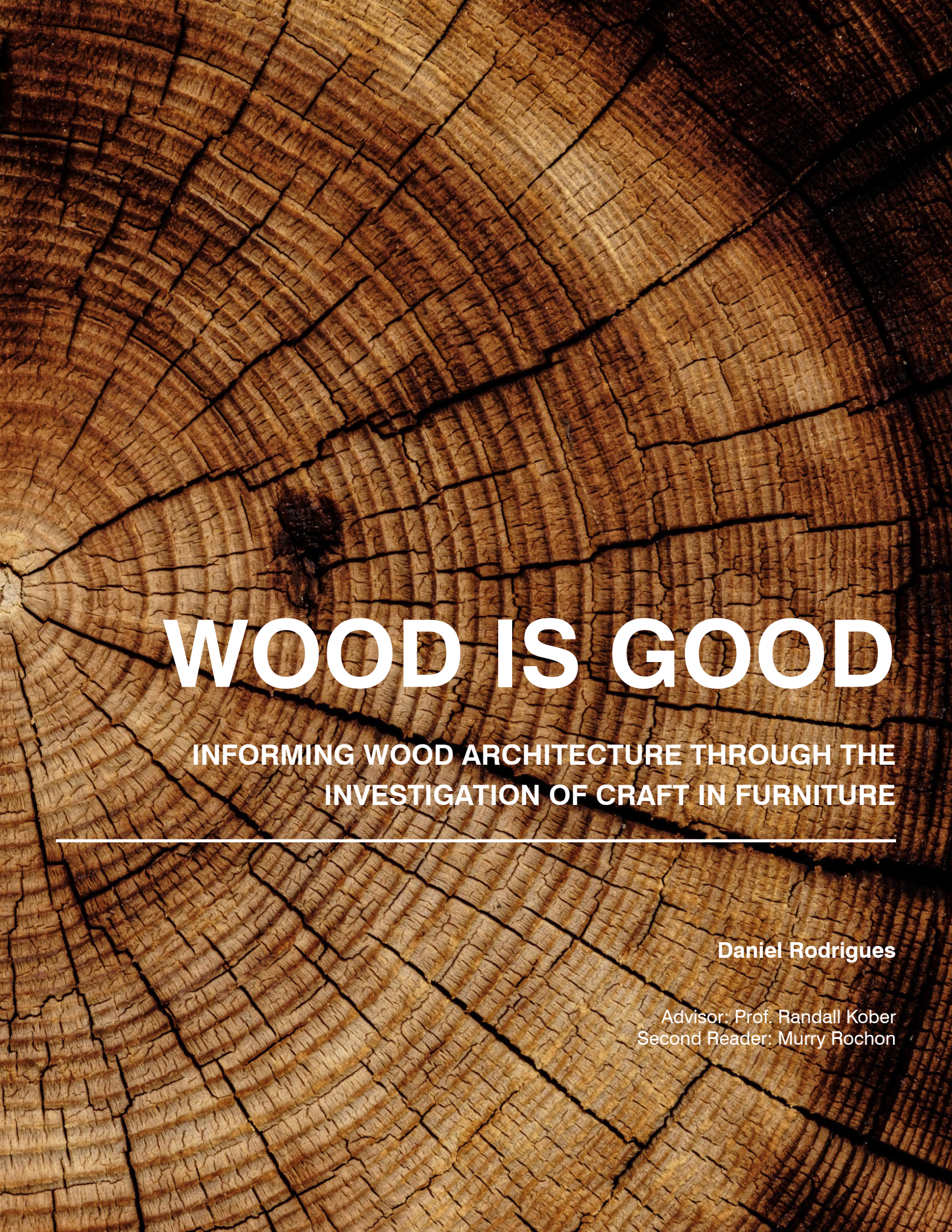

WOOD IS GOOD

INFORMING WOOD ARCHITECTURE THROUGH THE INVESTIGATION OF CRAFT IN FURNITURE

Daniel Rodrigues

Advisor: Prof. Randall Kober
Second Reader: Murry Rochon

TABLE OF CONTENTS

ABSTRACT

The act of craftmanship, specifically woodworking, gives a sense of accomplishment that is therapeutic. Improving the well being of someone who is part of this maker culture yields positive benefits to the state of their mental health from making as a form of therapy in a nonclinical manner. The final project will be a community oriented woodshop, located in the downtown of Sudbury, Ontario. This is a methodology driven thesis, where the primary method is learning through making; specifically, the design and construction of an intricate workbench as the most important experiment. The focus of the research is to investigate how the design and craft of furniture can inspire and inform contemporary wood architecture at varying scales. This architecture will be didactic in nature, exemplifying craft through the tectonic connections of complex wood joints that embody the inherit potential of wood as a building material.

ACKNOWLEDGMENTS

To Randal Kober:

A special thank you to Randy for taking me on as your student, I was able to explore what really inspired me with your help. It has been an amazing experience and thank you for giving me the idea for the title!

To Murry Rochon:

Thank you for taking on this extra responsibility is not required of you, especially as you went above and beyond in helping me and I greatly appreciate that. Your input and expertise have been invaluable.

To professors at the McEwen School of Architecture:

To every professor at the McEwen School of Architecture that I have had the pleasure of being mentored by, I thank you for putting everything you had into our educations. You all have made my experience here an amazing time and treated us with respect.

To the woodshop technicians at the McEwen School of Architecture:

I want to thank you for all of the guidance you have provided me with in the creation of the workbench for this thesis. I truly would not of been able to do it without you.

To my family and friends:

I want to thank my family for supporting me throughout my entire education, as I know it wasn't easy at first. For that I am truly grateful. To all my friends who believed in me and stuck by me as I worked towards this goal for the past six years, I thank you.

To Turner Fleischer Architects:

Lastly, I want to thank Turner Fleischer Architects for financially supporting me and investing in my future at their firm. A special thank you to Raza for believing in me from the start.

LIST OF FIGURES

GLOSSARY OF TERMS

Building Tectonics: *How different members come together and their relation to one another through the means of what is connecting them.*

Craft: *The culminating result of skill, technique and knowledge coming together to produce a well-made object that someone who is lacking in these areas could not produce.*

Craftsperson: *A person who has trained and acquired a specific skill set in their field of making.*

Connecting Joints: *One of the two overarching wood joint categories pertaining to when two or more individual wooden members are being combined at different angles to be supported by one, or as a way of transferring the structural load along a different axis.*

Connection: *The thoughtful joining of two members.*

Contemporary Canadian Timber Framing: *A practice found in Canada where it's a hybrid of European centric joinery while also freely incorporating complex joinery with Japanese roots.*

CDLT: *Cross Dowel Laminated Timber*

DLT: *Dowel Laminated Timber*

Didactic Architecture: *An architecture that is intended to convey instruction and information as well as pleasure and entertainment.*[1]

Diversity: *Allowing the natural properties of the material such as wood guide and inform the craftsperson, resulting in the final product varying depending on the material used.*

Empirical: *That pursues knowledge by means of direct observation, investigation, or experiments (as distinct from deductive reasoning, abstract theorizing, or speculation); that relates to or derives from this method of pursuing knowledge.*

Epistemology: *The theory of knowledge and understanding, esp. with regard to its methods, validity, and scope, and the distinction between justified belief and opinion; (as a count noun) a particular theory of knowledge and understanding.*

Heartwood: *The dense inner part of a tree which contains the hardest timber*

Japanese Timber Framing: *Vernacular techniques found in Japan utilizing intricate joinery.*

Maker Culture: *A collective perspective that upholds the value in craft and understands the positive benefits of partaking in the act of creating something of quality.*

Methodology: *The study of the direction and implications of empirical research, or of the suitability of the techniques employed in it; (more generally) a method or body of methods used in a particular field of study or activity.*

Prefabrication: *The process in which something is constructed prior to the arrival at the site either using computer assisted machinery or by a craftsperson.*

Sapwood: *The soft outer layers of recently formed wood between the heartwood and the bark.*

Sense of Craft: *The feeling that is invoked when an individual appreciates a well-made object based on their understanding of the making process or the raw beauty of it.*

Settler Timber Framing: *Vernacular techniques found in Canada, stemming from European practices, primarily utilizing mortise and tenon joinery.*

Splicing Joints: *One of the two overarching wood joint categories pertaining to when two individual wooden members are being combined to act as one along the same axis.*

Wood Joinery: *Connecting wooden members together by removing material to create a negative space to be filled by the other members and locking them together through either friction, adhesive or dowelling.*

Workmanship of Risk: *Using any kind of technique or apparatus, in which the quality of the result is not predetermined, but depends on the judgment, dexterity and care which the maker exercises as they work.*[2]

Workmanship of Certainty: *Using any kind of technique or apparatus, in which the quality of the result is predetermined because the judgment, dexterity and care that go into the creation of the technique or apparatus are what determine the final quality or work.*[3]

INTRODUCTION

Most people are familiar with the feeling invoked when in the presence of an ornate chapel, a historic timber framed house, or just interacting with a marvellously hand-made piece of furniture; that feeling is the sense of craft. This sense is ethereal, which emanates from a well-crafted piece of furniture up to the scale of a building. David Pye touches on this exact feeling; "there is something about the workmanship of risk, or its results; or something associated with it; which has long been and highly valued"[4]. It may be individually perceived because of their own knowledge of the process to make that building or object, drawing them to a sense of awe, or it is simply the raw beauty of it that does. It is only just perceived differently based on the person's own knowledge and sense of beauty. Pye goes on to sate "the crafts ought to provide the salt and the pepper to make the visible environment more palatable when nearly all of it will have been made by the workmanship of certainty"[5].

As a methodology driven thesis, the primary method is learning through making, focusing on the design and construction of an intricate workbench. *This thesis analyzes how the design and craft of furniture can inspire and inform contemporary wood architecture at varying scales, drawing from Settler, Japanese and Contemporary Canadian timber framing to create an intricately designed building.* This sense of craft is what is being manifested in the final design of this thesis; which is to be a community oriented woodshop, focused on improving the well being of people and fostering a maker culture in downtown Sudbury. Through making as a form of therapy, people who struggle with anxiety, depression, or any other aspect of mental health, can use the woodshop to improve the state of their mental health in a non clinical manner.[6]

01 EXPLORATION OF WORKMANSHIP

This thesis begins with a review of David Pye's, *The Nature and art of Workmanship*; Peter Zumthor's, *Thinking Architecture*; Florian Aicher's, *on the Path to Building* and Richard Sennett's, *The Craftsman*. The importance of craftmanship and workmanship of risk is established, creating the theoretical framework of this thesis, setting the tone. Then the importance of wood as an abundant local building material is established and the properties of specific species are discussed regarding what will be used in the final architecture of this thesis.[7] Following that, the meticulous

research creation process focused around making is started. The groundwork for the physical experimentation is laid out in a review of the joinery, that leads into physically making some of them.

02 THE WORKBENCH

Learning from the making process of the initial joinery experimentation; this sets up the next chapter where the exploration into craft at a furniture scale is investigated, more specifically pertaining to a workbench. Starting off with different case studies of workbench styles informs the final design of the workbench of this thesis. Then the design process of the workbench specific to this thesis is picked apart and laterally applied to the ways it informs the design process of the final architectural project. Next, the making process is analysed, taking the lessons learned regarding craftsmanship and the joinery and then exploring how they can be applied to architecture, specifically the detailed connections.

03 TIMBER FRAMING

Switching research methods, a focus into timber framing architecture is explored. This is done through a case study based research process, more specifically working through a series of exploded isometric drawings showing the different buildings and connections being assembled. For the settler timber framing, a focus on the early architecture found in Canada where a smaller building is drawn to investigate the intricate joinery that can be scaled up. A timber framed barn typology will be the focus of study for the contemporary Canadian timber framing. The complex connections found in Japanese timber framing will be analysed and explored regarding how to incorperate them into the final architecture of this thesis project.

04 MAKERSPACES AND THEIR BENEFITS

In this section, making as a form of therapy will be explored and understood as a legitimate treatment method. This will be based off of case study of a rehab center but backed up with clinical practice documentation of making as a form of therapy.

Woodworking will be the specific therapeutic avenue of making in this project. Then a review of different community workshops will provide insight into how to properly run and structure this community oriented woodshop. As well as, providing valuable insight into focusing on the use of hand tools. Then the existing maker culture of Sudbury is explored to help understand how to integrate it into the existing social fabric of the city.

05 DESIGNING A COMMUNITY ORIENTED WOODSHOP IN SUDBURY

The conceptual architectural ideas and design precedents are first covered. Continuing in the direction of making as a form of therapy, this perspective is then used to site the building in the downtown of Sudbury, putting it in proximity of services that help someone who is struggling with their mental health. Allowing the program of the building to not operate as a clinical model but as a space where anyone can benefit from the positive mental health effects from making as a form of therapy. Building off that, the community oriented woodshop program will be presented as a feasible model that works with the makers and the community of Sudbury as a whole, creating a centralized maker culture in the downtown. The design will be presented and looked at more thoroughly, bringing attention to the specific architectural interventions that make this project so unique.

06 CONCLUSION

This last section will be a brief review of each of the chapters, focusing on the key takeaways from the research. Then examining how the learning through making methodology research was constantly building on itself informed the next steps in the process. Then a thorough conclusion will be presented on how the research question was answered through the design of the final project and how it was informed and inspired by the workbench. Also, moments will be highlighted where workbench and a sense of craft shines through the final design again.

ENDNOTES

1 “Didactic Definition & Meaning,” Merriam-Webster (Merriam-Webster), accessed February 8, 2022, https://www.merriam-webster.com/dictionary/didactic.

2 David Pye, The Nature and Art of Workmanship (Cambridge: Cambridge University Press, 1978), 4-5.

3 Ibid,.

4 Ibid, 6-7.

5 Ibid, 76.

6 Monica Smith, “Carpentry: an Unlikely Asset in Addiction and Anxiety Recovery,” Anxiety Resource Center, November 15, 2018.

7 E. J. Mullins, and T. S. McKnight, Canadian Woods, Their Properties and Uses (3rd ed. Toronto ; Buf falo: Published by University of Toronto Press, in cooperation with the Canadian Forestry Service, Environment Canada, and the Canadian Govt. Pub. Center, Supply and Services Canada, 1981).

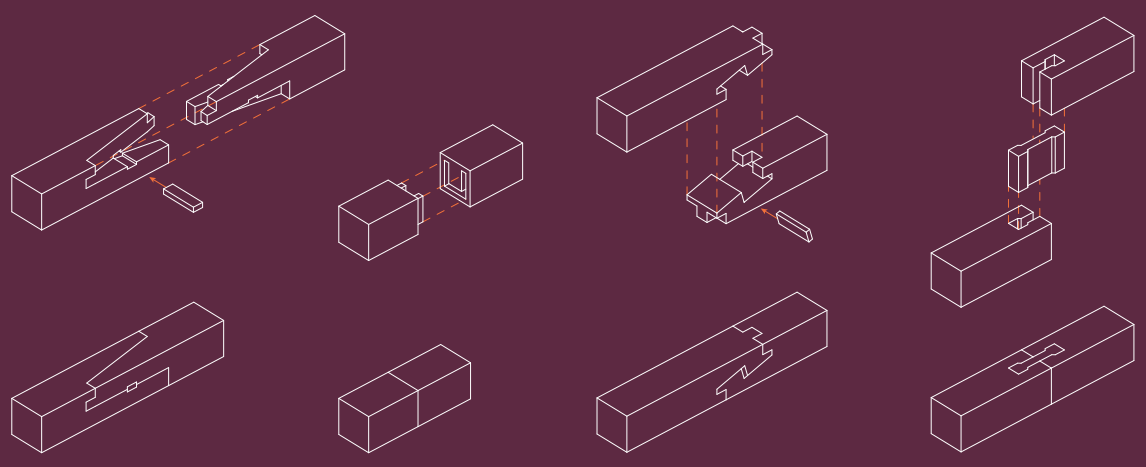

Figure 1.00

01

EXPLORATION OF WORKMANSHIP

Beginning a more meticulous dissecting of the research conducted for this thesis, it seems fitting to start with the most important theoretical underpinnings pertaining to the argument of workmanship of risk compared to the workmanship of certainty. Following that, the importance of using wood as a building material is stressed, due to its versatility as well as the sustainable benefits of it. Along with an overview of the different kind of species and their properties, focusing on local options and what are the choices available for a project in Ontario. After that is all established, the physical and digital joinery experiments will be reviewed and recognized as influencing the next stage of the research in this thesis.

1.1

WORKMANSHIP OF RISK OR WORKMANSHIP OF CERTAINTY

When one thinks about the workmanship of certainty compared to the workmanship of risk there is one main question that separates the two terms; is the result predetermined and unalterable once production of the object begins?[1] The allowance for human creativity and intervention in the making process is one factor that makes the workmanship of risk so desirable. However, in our contemporary world there is a balance that needs to be struck between the two kinds of workmanship regarding the architectural scale. It is not reasonable to construct every aspect of a building through a craftsperson but when there is a moment where workmanship of risk can be celebrated in the architecture it should be. There is something beautiful craftmanship and the resulting diversity in wood joinery of furniture that should be able to be expressed in the architecture of wood buildings; where the materiality is celebrated through the tectonics, invoking a sense of craft.

One of the best qualities in the workmanship of risk is the resulting diversity of the finished product. Moreover, "Good workmanship, whether free or regulated, produces and exploits the quality I have called diversity, and by means of it makes an extension of aesthetic experience beyond the domain controlled by design"[2]. Specifically for wood, it allows the uniqueness of the material to be utilised and allows the craftsperson's intuition and creativity to take advantage of these moments where it can be celebrated.[3] When compared to workmanship of certainty and the resulting aesthetic potential, it is clearly the better option when working with a material such as wood where it has a plethora of untapped potential in the preexisting diversity in each piece of lumber. Furthermore, "diversity on the small scale is particularly delightful in regulated workmanship because there it maintains a kind of pleasantly disrespectful opposition to the regulation and precision of the piece seen in the large … diversity imports into our man-made environment something which is akin to the natural environment we have abandoned"[4]. David Pye brings attention to how exploiting the natural potential of wood can create a more pleasant built environment that resembles the natural world by allowing a level of diversity back into the one that we create. *Figure 1.01* represents the idea of workmanship of risk striking a balance with

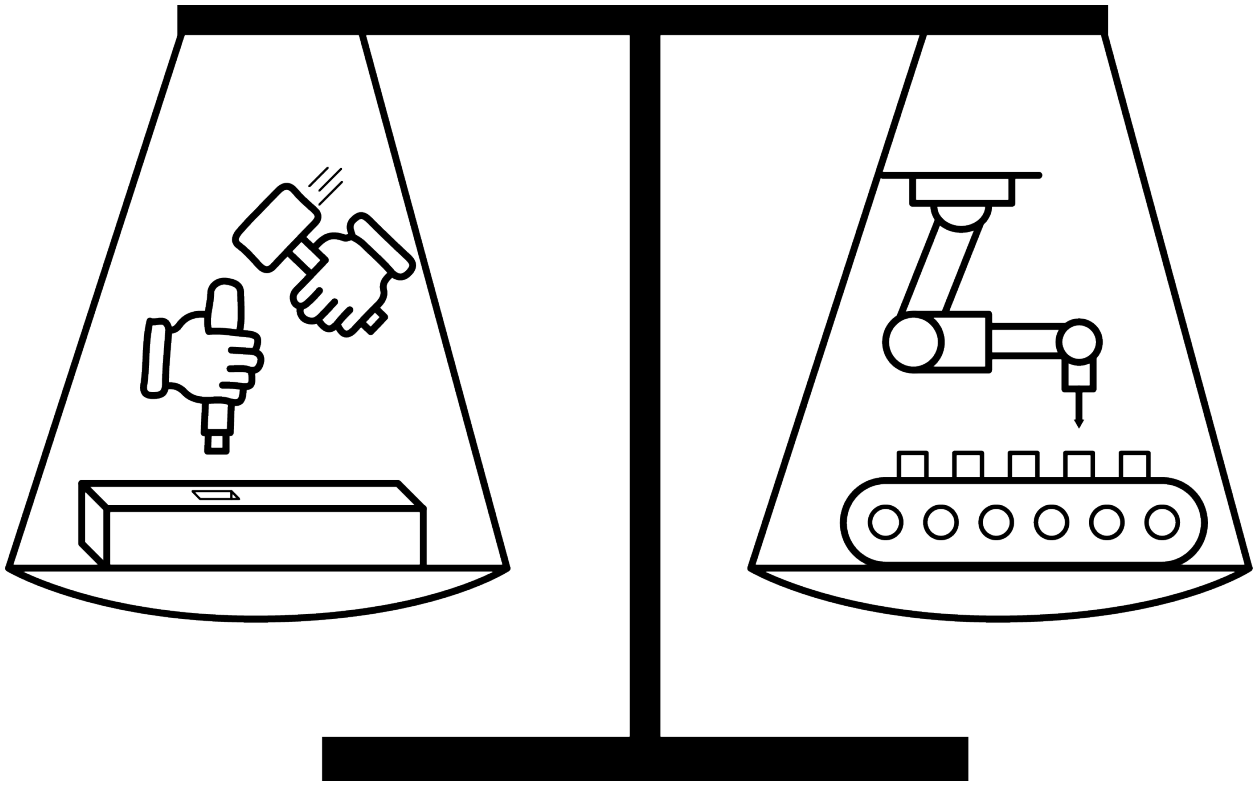

the workmanship of certainty. They need to balance out in an architectural project as with too much risk, the feasibility and the cost of the project become unrealistic but with too much certainty then the atmosphere of the space becomes sterile from the lack of diversity.

Taking a closer look at the workmanship of certainty, it is not all bad. Specifically, when working with materials such as steel that can be easily manipulated and controlled on a mass scale, as it does not contain the same inherent diversity that exists in wood. David Pye brings to attention, if over used in the built environment, it can produce a "quality in design which is called clinical is more or less the quality of no diversity. A little of it, for a change is pleasant, but an all clinical world might be fairly oppressive, and such a world of design and workmanship without diversity is decidedly a possible one, now... The workmanship of certainty can do nearly everything well except produce diversity"[5]. This may seem like a small drawback but, it makes a much larger impact on the atmosphere of the space, almost like it is not meant for the human where all hints of the natural environment are lost to the workmanship of certainty. Without the use of it in contemporary architecture we could not of created a built environment of the scale we see today.

Figure 1.01

As a methodology driven thesis, the primary method is learning through making. Specifically, the design and construction of an intricate workbench as the focal point of this research. This thesis analyzes how the design and craft of furniture can inspire and inform contemporary wood architecture at varying scales, drawing from Settler, Japanese and Contemporary Canadian timber framing to create an intricately designed building. This architecture will be didactic in nature, exemplifying craft through the tectonic connections of complex wood joints that embody the inherit potential of wood as a building material and brining attention to how the "beauty of the architecture derives not only from its design and construction techniques but also from the very soul of the wood itself"[6]. This will continue from large scale structural connections down to small scale details, in the end invoking a sense of craft. Holding to this way of thinking, the architecture of the final project will be constructed more with skilled artisans then with the use of computer assisted prefabrication techniques. It will also focus on celebrating the tectonics as Peter Zumthor draws attention to their importance when he says, "to a large degree, the quality of the finished object is determined by the quality of the joints"[7].

1.2

CANADIAN WOODS & THEIR PROPERTIES

There are many reasons as to why this is to be a wooden building; one of the main arguments has to do with the sustainability of wood compared to other building materials such as concrete and steel.[8] With wood being a renewable resource, it can be used for carbon sequestration and when compared to steel or concrete the CO2 emissions for material production are almost cut in half for the entire building, represented in *figure 1.02*.[9] Canada is also known as a forest nation with an estimated 19 billion m3 of potential lumber which is about 7% of the total forests of the world, which makes it readily accessible and a smart choice to use.[10] Moreover, the production of concrete makes up roughly, six to eight percent of the total global carbon footprint.[11] Focusing on metal, there are two main factors that contribute to it being a poor choice regarding sustainability. The process to get the ore is environmentally disruptive and resource-consuming as well as the process to refine it is energy intensive, specifically with aluminum its embodied energy is larger higher than most medals.[12]

It seems fitting to focus on wood as the primary material of study in this thesis as Canada is known as a forest nation with an estimated 19 billion m3 of potential lumber which is about 7% of the total forests of the world.[13] There are eight main regions that make up the entirety of the Canadian forests, with about 140 native species

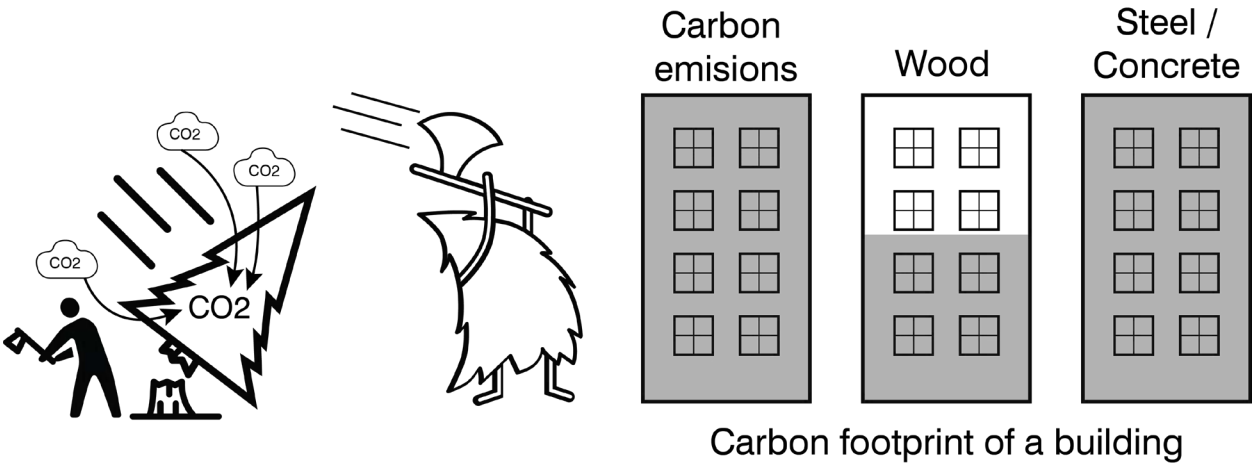

Figure 1.02

dispersed throughout.[14] Furthermore, there are two main categories of tree species, the first is deciduous (hardwood), these lose their leaves in the fall and the latter is coniferous (softwood), these keep their needles year round.[15] The coniferous category of trees dominate the Canadian forests, making up about 80% of them but are only 31 of the 140 native species in Canada.[16] Breaking down Canada's forests into regions defined by broad uniformity both in physiography and composition of the dominant tree species, you get 8 dominant categories. These regions are the, Acadian, Boreal, Coast, Columbia, Deciduous, Great lakes-St. Lawrence, Montane and Subalpine.[17] *Figure 1.03*, shows the 4 forest regions in Canada that are going to be investigated further and they are the Boreal Forest region, Great Lakes-St. Lawrence Forest region, Deciduous Forest region, and the Acadian Forest region as they are the closest to Sudbury allowing them to be the most local sources of wood.

These regions contain a large variety of both coniferous and deciduous native species that can be used as a smart and sustainable construction material.[18] The Boreal Forest region is the largest in Canada but the southern portion is what is being considered, it is a primarily coniferous consisting of white and black spruce as well as balsam fir and jack pine. The deciduous species also consist of poplar, aspen, white birch as the more prevalent ones. The Great Lakes-St. Lawrence Forest is the second largest region and acts as a transitional region between the coniferous dominated Boreal Forest and the deciduous dominated Deciduous Forest.[19] Some of the more prevalent coniferous species are eastern white pine, red pine, eastern hemlock and yellow birch along with some of the more prevalent deciduous species such as sugar and red maple, beech, red oak, white ash, and white elm; also containing many species form the Boreal Forest. The Acadian Forest region is closely related to the Great Lakes-St. Lawrence Forest sharing many of the same species along with red and black spruce, white and Grey birch, white elm, black ash and red maple. Furthermore, the Deciduous Forest is the smallest region but contains the largest number of native species out of any other region.[20]

There is a plethora of species to chose from as Sudbury is conveniently close to all four of them and subsides in the Great Lakes-St. Lawrence Forest region. That being said, there are only going to be a few species selected to be analysed for their properties based on what is commonly used and easily accessible for

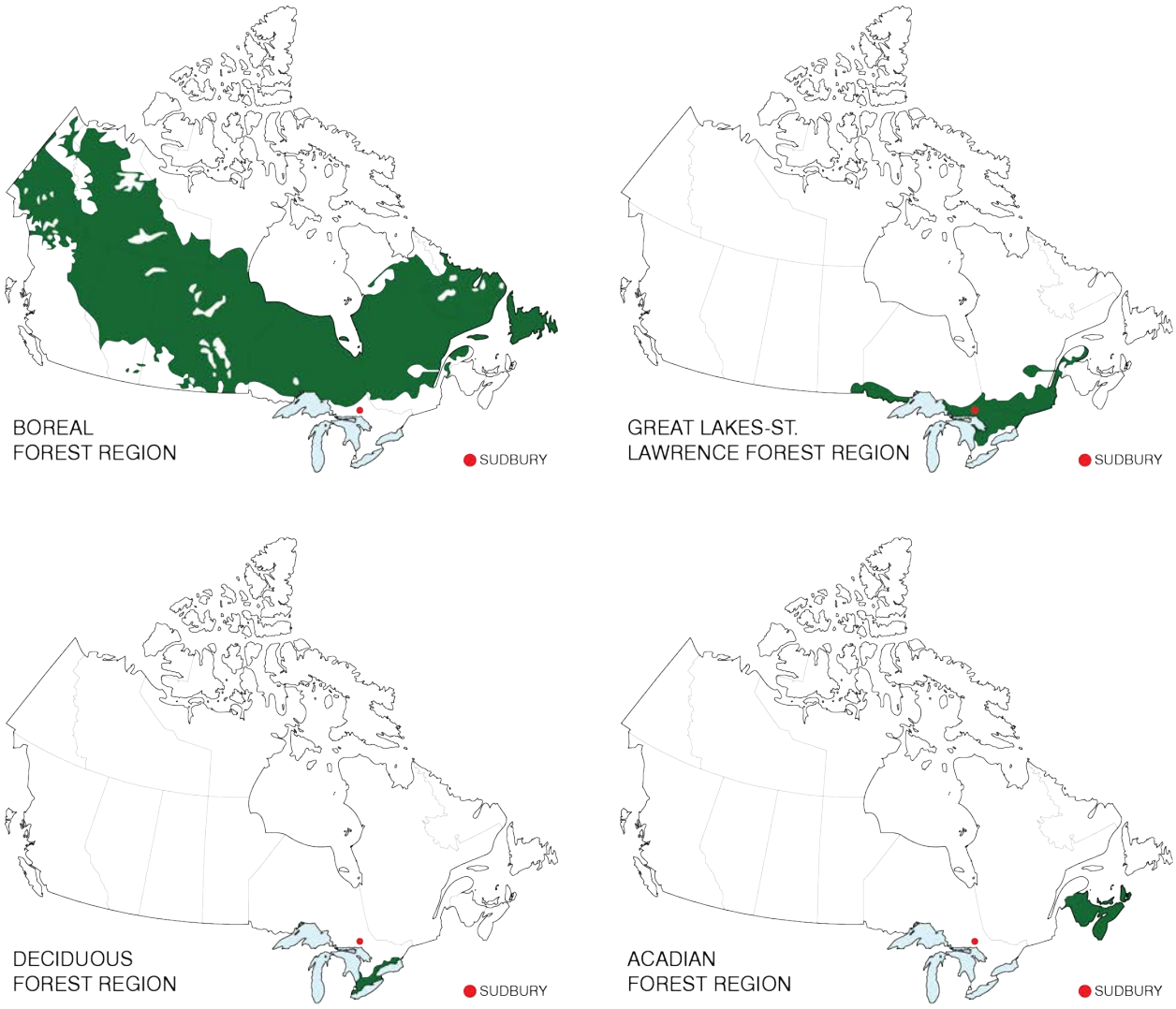

a project situated in Sudbury. Looking into the local saw mills and lumber yards, there is a large selection of species to choose from. Some of the Coniferous options are, Eastern White Cedar, Balsam Fir, Eastern Hemlock, Eastern White Pine, Red Pine, Jack Pine and Eastern Spruces. In terms of deciduous options there are White Ash, Black Ash, Beech, Yellow and White Birch, White Elm, Hard Maples, Soft Maples, White Oak, Red Oak, and Aspen.[21] Not all of them are good for the structural purposes but could be included in the details and intricacy of the architecture and the furniture inside the building.

The Eastern White Cedar is normally used for exterior purposes as it is one of the most durable species in Canada but it is not strong, making it a good fit for interior and exterior finishes.[22] It is usually 13m high and 30cm in diameter;

Figure 1.03

the heartwood is light brown and the sap wood is nearly white and the grain is usually straight.[23] The Eastern White Pine is good for structural members as it is easy to work with, allowing for complex joinery to be made more easily. It is usually 27-38m high and 45-75cm in diameter; the heartwood is a light brown; the sapwood is almost white and the grain is straight with few knots.[24] Hard Maples consist of sugar and black maple but their properties are basically the same. They usually are 24-27m tall, up to 75cm in diameter; it is creamy white to light brown in color; the grain is usually straight with a slight wave; the strength, stiffness, shock resistance and surface hardness are all great; it is one of the most important commercial species in Canada, being used in furniture, interior finish, plywood and flooring.[25] This is the wood that I am using for my workbench as it is the strongest local species that makes sense for what I am building and is easy to source from a local saw mill.

1.3

JOINERY EXPLORATION

After laying the foundational knowledge and exploring the architectural theory, the learning through making method takes priority for the joinery exploration subsection. A review of complex joinery, both from the Japanese timber framing as well as the Settler timber framing was conducted before the physical experimentation. Preceding the common use of wood glue, Japanese carpenters would use the expansion and contraction in the wood to create friction to hold the joinery together or expand the tenon in the mortise through force, making it impossible to remove once inside.[26] This spiked my interest in complex joinery that didn't require an adhesive but only used friction and wooden locking mechanisms to create the joinery, making it a very sustainable and interesting path to explore. As the physical experimentation was underway, this prompted taking a chance to not use glue, but instead attempting to create joinery that only relied on friction and locking mechanisms such as hard wood pegs.

It is clear that there are two main overarching categories of wood joints; the first is splicing joinery and the second is connection joints.[27] Splicing joints remain their own category when the grouping of joinery gets more specific, as they are uniquely used to connect two individual members together along the same axis, essentially increasing the length or height of a beam or post.[28] These kinds of joints are very complex but can be very useful when working with smaller sized lumber, allowing for the use of younger trees. Connecting joints are when two or more members are being combined at different angles to be supported by one another or as a way of transferring load along a different axis.[29] However, this category is very broad so when taking a closer look it is broken down into three separate connecting joint categories and they are; oblique joints, corner and cross joints and edge joints.[30] Moreover, an oblique joint is used to connect two pieces of wood together that meet at an angle less than 90^0.[31] A corner and cross joint is pretty self explanatory, they are used a lot when a beam is sitting on top of a post creating a T-shaped intersection, as well a when two members come together to form a right angle joint at the ends of both of them.[32] Lastly, edge joints are used to connect boards edge to edge, this is often done

with a batten that is slide between the two boards or a tongue and groove like condition to help fight the warping of the boards at the same time.[33]

Focusing on the broad category of splicing joints, a large number of them were modeled on the computer to better understand how they work and come together. This was first done on the computer to simulate the physical making process, allowing for a large amount to be studied compared to the few that were physically constructed. Out of the eight that were drawn in *figure 1.04*, below there were two joints that were really interesting and merited further physical exploration to better understand them. These two joints

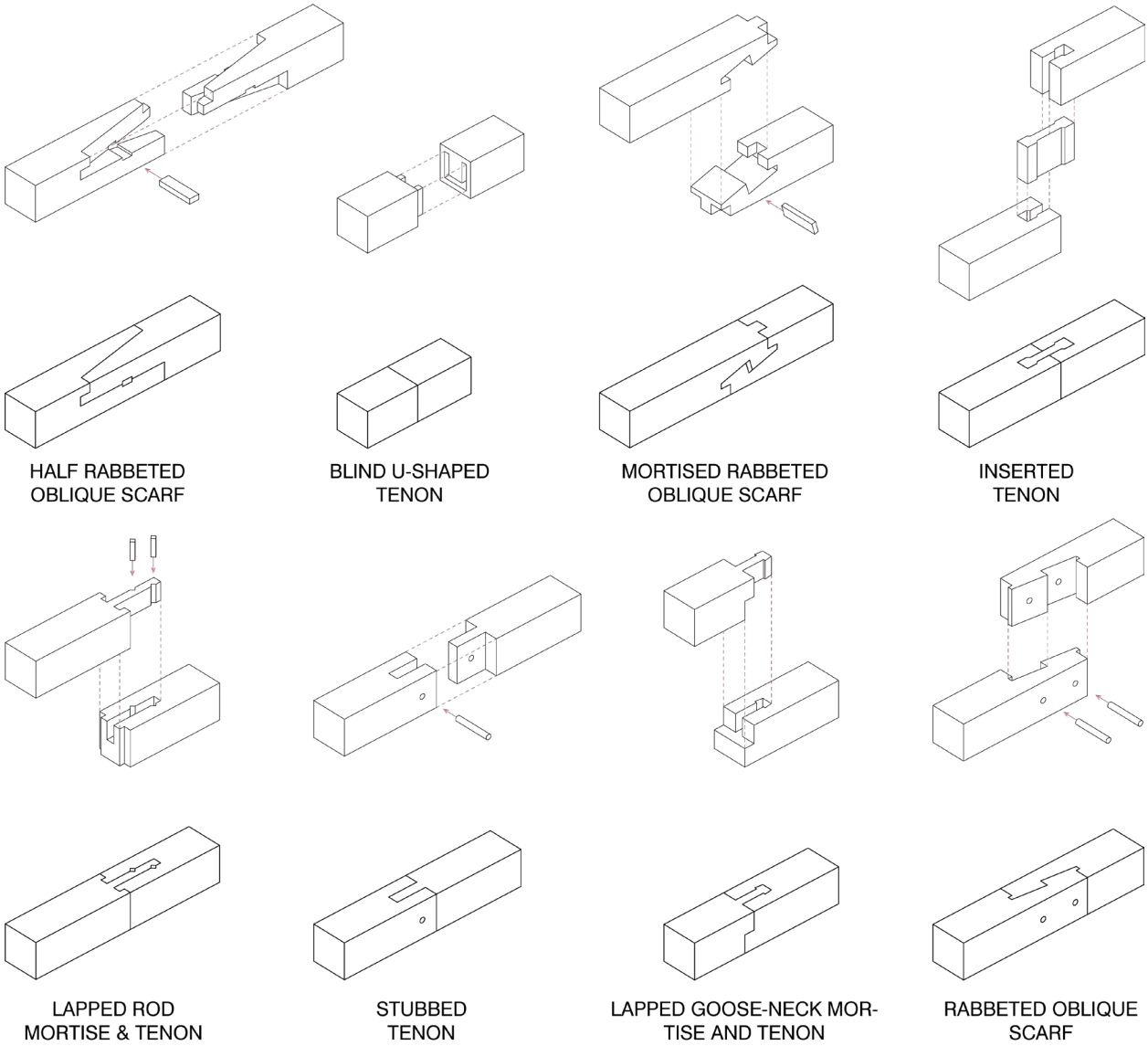

Figure 1.04

are the mortised rabbeted oblique scarf and the lapped rod mortise and tenon. They were worked into some scrap pine 4x4's to create a longer post, using the joints as their intended function, as seen in *figures 1.05 to 1.08*. The learning through making process of these two joints was very informative, it helped to develop my understanding of how friction fitted joinery comes together.

Figure 1.05 / Figure 1.06
Figure 1.07 / Figure 1.08

Moving onto the second and largest over arching category of wood joinery; the connecting joints make up most of the 600 or so known today.[34] The process seen in *figure 1.09, 1.10 and 1.11*, are the same as the splicing joints. However, with these joints the effects of the expansion and contraction of wood due to humidity levels was a really big learning experience. When first made in the fall semester, they were extremely tight fitted but as the winter semester came, they dried out in the school resulting in the joinery loosening.

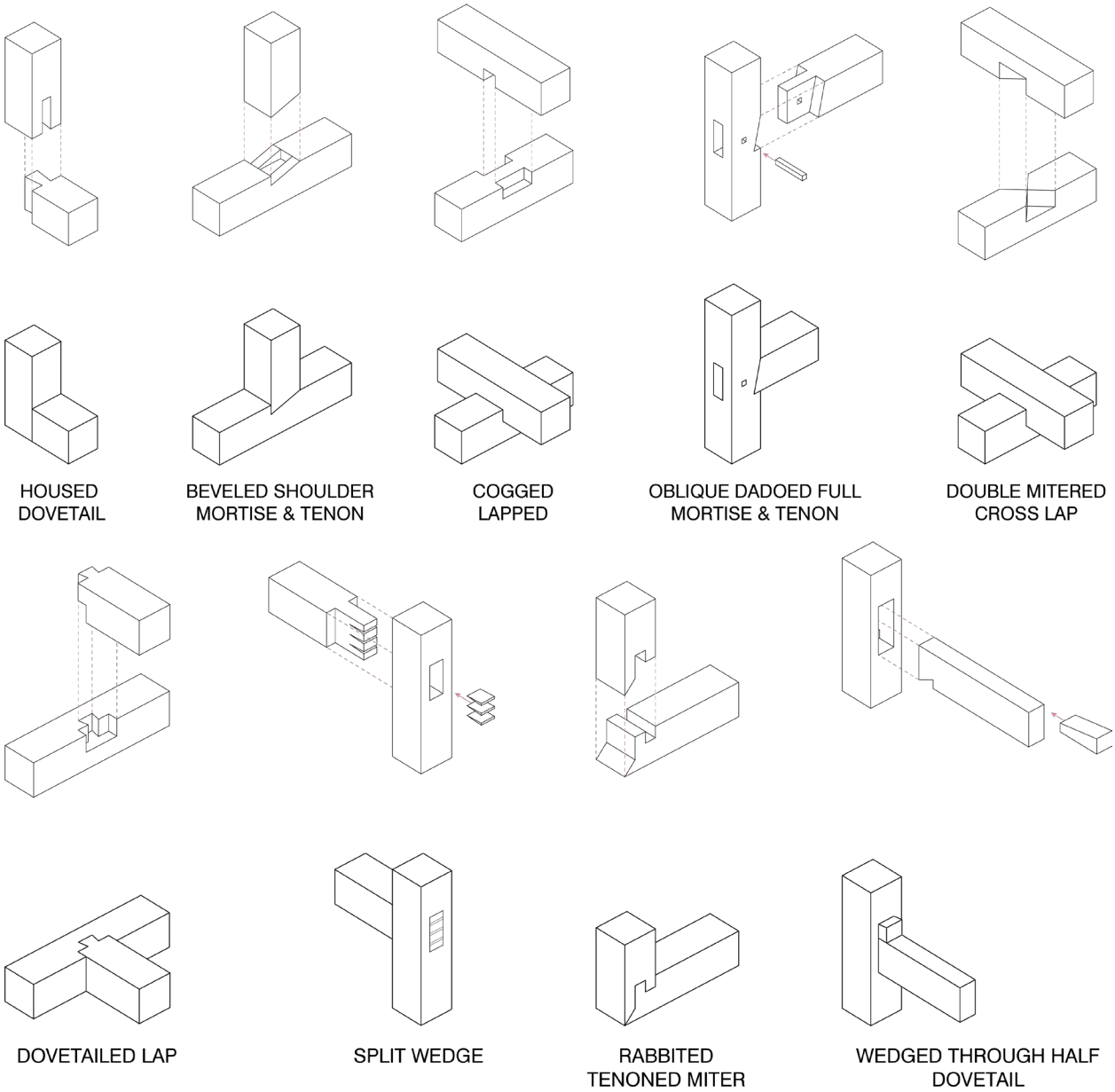

Figure 1.09

Figure 1.10 / Figure 1.11

After exploring both with splicing and connecting joints it was time to think outside the box and try something untraditional. Following the same realm of curiosity spiked by the wood joinery involving only friction, wedges, and pegs, led to making a unique piece of Cross Dowel Laminated Timber (CDLT). As you can see in *figure 1.09*, the exterior face is finished quite smoothly with a traditional shou sugi ban wood burnt finish that is applied to all the individual members allowing the preservation capabilities of the wood to increase in a completely natural and sustainable manner. As seen in *figure 1.08*, the custom-made edge joinery of a tongue and groove in the vertical members is employed, to increase the strength of the CDLT through the incorporation of joinery. It did keep the vertical panels more intact and rigid than the horizontal members taking some of the stress off the dowels in resisting the lateral forces. However, through the making process an interest in dowel laminated timber began. Which in combination with the earlier interests from the making of the splicing and connecting joints, a direction for the making of the workbench in the next chapter began to reveal itself.

Figure 1.12

Figure 1.13

ENDNOTES

1 David Pye, The Nature and Art of Workmanship (Cambridge: Cambridge University Press, 1978), 6.

2 Ibid., 71.

3 Ibid., 74.

4 Ibid., 72.

5 Ibid., 73.

6 Kiyoshi Seike, Yuriko Yobuko, and Rebecca M. Davis, The Art of Japanese Joinery (Boulder: Weatherhill, 2019),13.

7 Peter Zumthor, Peter Zumthor Thinking Architecture (Basel: Birkhäuser, 2017), 13.

8 Blaine Brownell, Material Strategies: Innovative Applications in Architecture (New York, NY: Princeton Architectural Press, 2012), 45, 85.

9 Susan Jones, Mass Timber: Design and Research, (Novato, CA: ORO Editions, 2019), 44, 51.

10 E. J. Mullins, and T. S. McKnight, Canadian Woods, Their Properties and Uses (3rd ed. To ronto; Buffalo: Published by University of Toronto Press, in cooperation with the Canadian Forestry Service, Environment Canada, and the Canadian Govt. Pub. Center, Supply and Services Canada, 1981), 3.

11 Blaine Brownell, Material Strategies: Innovative Applications in Architecture (New York, NY: Princeton Architectural Press, 2012), 45.

12 Ibid, 88.

13 E. J. Mullins, and T. S. McKnight, Canadian Woods, Their Properties and Uses (3rd ed. To ronto ; Buffalo: Published by University of Toronto Press, in cooperation with the Canadian Forestry Service, Environment Canada, and the Canadian Govt. Pub. Center, Supply and Services Canada, 1981), 3.

14 Ibid., 3.

15 Ibid.

16 Ibid.

17 E. J. Mullins, and T. S. McKnight, Canadian Woods, Their Properties and Uses (3rd ed. To ronto ; Buffalo: Published by University of Toronto Press, in cooperation with the Canadian Forestry Service, Environment Canada, and the Canadian Govt. Pub. Center, Supply and Services Canada, 1981), 4.

18 C. R. Stanton and R. J. Bourchier, “Forest Regions,” The Canadian Encyclopedia, March 7, 2006, https://www.thecanadianencyclopedia.ca/en/article/forest-regions.

19 Ibid.

20 Ibid.

21 E. J. Mullins, and T. S. McKnight, Canadian Woods, Their Properties and Uses (3rd ed. To ronto ; Buffalo: Published by University of Toronto Press, in cooperation with the Canadian Forestry Service, Environment Canada, and the Canadian Govt. Pub. Center, Supply and Services Canada, 1981), 10-36.

22 Ibid., 10.

23 Ibid.

24 Ibid., 18.

25 Ibid., 32.

26 Azby Brown, The Genius of Japanese Carpentry - Secrets of an Ancient Craft (Tuttle Shokai Inc, 2014),70.

27 Kiyoshi Seike, Yuriko Yobuko, and Rebecca M. Davis, The Art of Japanese Joinery (Boulder: Weatherhill, 2019),14.

28 Ibid.

29 Ibid.

30 Wolfram Graubner, Encyclopedia of Wood Joints (Newtown: The Taunton Press, 1998),1.

31 Ibid., 64.

32 Ibid., 82.

33 Ibid., 124.

34 Ibid., 1.

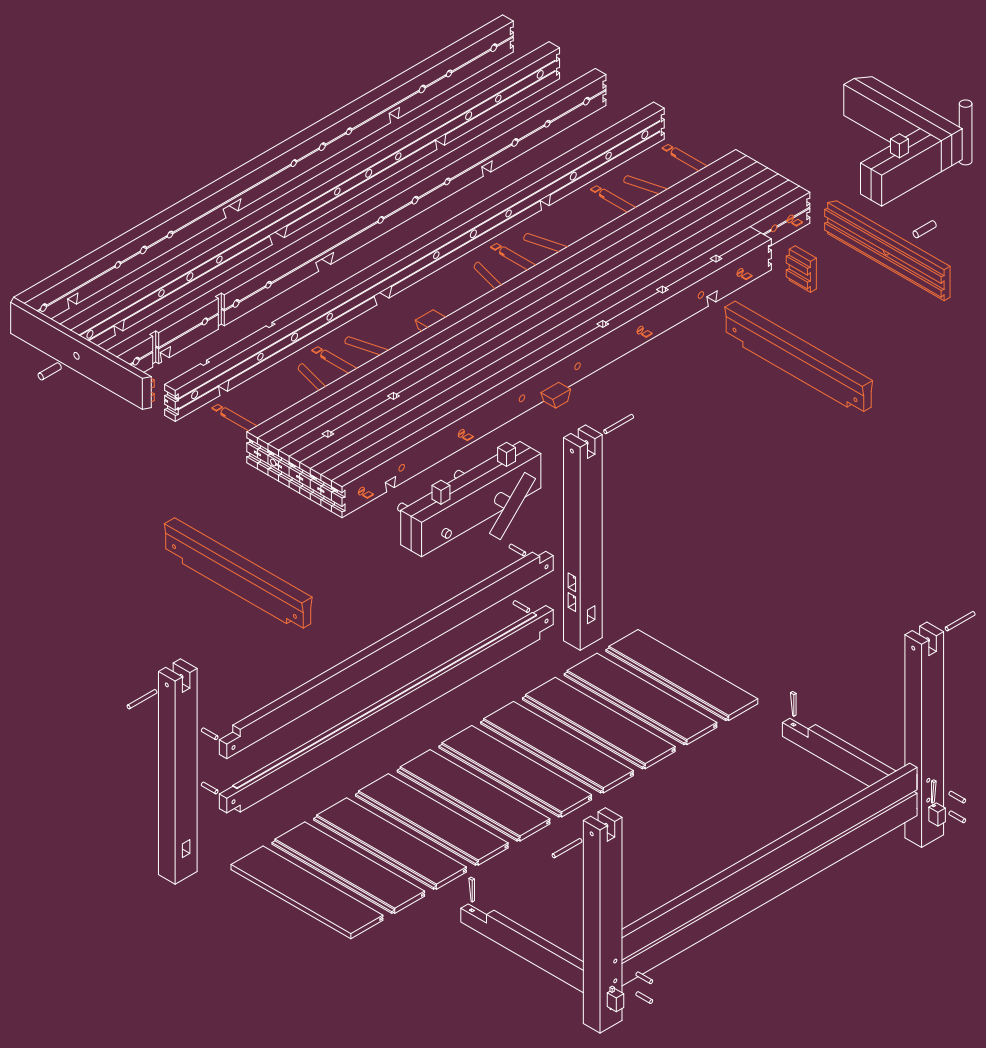

Figure 2.00

02

THE WORKBENCH

This next section starts with the literature review of *The Anarchist's Workbench* book and then a deep dive into the design of "The Anarchist's Workbench". As stated previously, the focus of this research is to learn how the intricacy and craft of furniture can inform the architectural scale; this also applies to the design process of the furniture itself. Parallels can be drawn throughout this whole chapter; for example, when selecting the species of wood, you need to consider the way it will be tooled and the joinery that will be used. This will lead you to consider if the species will be strong enough to preform depending on the forces exerted in the connections and whether it be compression or tension. Moreover, the design and meticulous making process of the workbench is presented in detail and then analysed.

2.1

CASE STUDIES: DRAWINGS

In this subsection the different kinds of workbenches will be reviewed and a few will be analysed as well as modeled to better understand them and learn from them. Specifically, the timber framed and the cabinetmakers style bench will be analysed and modeled which will then inform the design of the workbench that I am making. In the beginning of the book, the author talks about how "a workbench should never have to be replaced or upgraded. I'm not a fan of tools, furniture or anything that becomes obsolete. Mass-market workbenches, much like mass-market tools, have a short lifespan. That way you are obligated to buy another tool or workbench on down the line. This feeds a wasteful machine"[1]. This brings to light some aspects that are wrong with the world of workmanship of certainty and how it has a tendency to produce with an intention to make the resulting products obsolete. This idea of making something with the future in mind is one of the ways workmanship of risk adds a level of sustainability in the design and building as you build it to last, thus adding more value to the work that is made with this method. Moreover, "It should continue simply because the workmanship of risk in its highly regulated forms can produce a range of specific aesthetic qualities which the workmanship of certainty, always ruled by price, will never achieve"[2]. In *figure 2.01*, is a photo of the Anarchist's workbench that was designed and built to last. It was constructed through the workmanship of risk by a skilled trades-person and the end result is a masterfully and carefully thought through piece of furniture that exemplifies the sense of craft. Beautifully stated by the author, "the workbench should help you make furniture that never needs replacing. In many ways, the workbench is the mother of all my thoughts about furniture and society. With your bench and your tools, you can make furniture for customers and loved ones that ends the stupid cycle of 1) buy a bookcase, 2) use it until it falls apart, 3) buy another bookcase"[3]. This reasoning along with how the workbench is the central piece of furniture in a workshop is why it is the best object to intricately design and build to then allow to inform the architecture of the workshop itself.

Before designing the bench there are 5 main different kinds of work benches to choose from and they all lean

Figure 2.01

towards a specific kind of carpentry. The different styles are; staked workbench, panelled workbench, built-in workbench, timber framed workbench, and the cabinetmaker's workbench. The first three were reviewed quickly as it was apparent in their designs, they are inferior to the timber framed and the cabinetmaker's bench for what this research was exploring. The staked workbench design is one of the oldest ones where it is traditionally a slab for the top with legs tenoned into it, sitting low to the ground to help keep it stable. The design excels with most green woodworking tasks, its low stance is ideal for leaning into the work and using your body weight as the clamp, plus hewing with a hatchet, cross cutting, mortise and planning but is not suited for more intricate joinery work.[4] The next style under review is the panelled work bench, it is one of the cheaper options and uses the least amount of material than most of the other designs as commonly it is constructed with plywood to create a stiff box as the workbench top, resulting with a skirt that wraps around the bench. It can be easily slapped together in a couple days as they are lightweight, simple connections and fasteners and with little skill but the downside is the skirt makes it hard to clamp anything around the bench and it warps easily if wet.[5] Another version is the built-in workbench, it is very practical in terms of the utilization of space in the workshop as it uses the structure to support it. It can be cheaply and quickly built but it should not be the only bench in the shop as there are a lot of woodworking operations that cannot be done on it or are just awkward and you cannot more it without removing it from the wall.[6] All of these three designs have their pros and cons but this research is focused more on the intricacy and craft of the design which these three are lacking.

Moving onto the timber framed workbench, the analysis started with following the book as the author developed his understanding and skill in making the optimal design of this specific style. It encompasses, large chunky legs, involving lots of right angles with mortise and tenon joinery allowing them to last a significant amount of time if treated well. It has strong and straightforward joinery, they are heavy allowing them to be adapted for a wide variety of making but they are large and difficult to source materials for, they are also time consuming to assemble.[7] *In figure 2.02,* is the most rudimentary design of the timber framed bench built by Christopher Schwarz. In a process to understand the basics of the design it was modeled and then laid out as an exploded isometric, allowing for the joinery and lamination techniques to be revealed.

As the author guides you through the process of his designing of the Anarchist's workbench design development, the understanding of the timber framed technique is developed. He continues to talk about how he thinks the best design of a workbench consists of four chunky legs that are joined by for stretchers, paired with a massive bench top and how he tried to avoid mechanical fasteners and hardware, instead focusing on square mortise and tenon joints. He continues to stress the fact that there should be nothing that impedes the clamping of work along the bench face and edges like a skirt, draws or other awkward but well-intentioned additions that takeaway from the practical functions of the workbench itself.[8]

As the design develops into the final version that is seen in *figure 2.03*, the importance of joinery for the purposes of longevity in the final product are stressed. The author points out that "the benches that relied on mechanical fasteners – especially lag screws or wood screws – had serious problems. The wood around these fasteners had been wallered out, and the fastener was holding on but not holding fast"[9]. The pegged drawbored mortise and tenon in his opinion is the best for a long lasting joint as it pulls the tenon tight into the mortise with the peg whole offset an 1/8 of an inch, locking it in despite the eventual expansion and contraction of the wood.[10] Furthermore he goes into details of the specific dimensions of the members and dowels used in the final design seen in *figure 2.03*, as well as the reasoning behind the positioning of the whole in

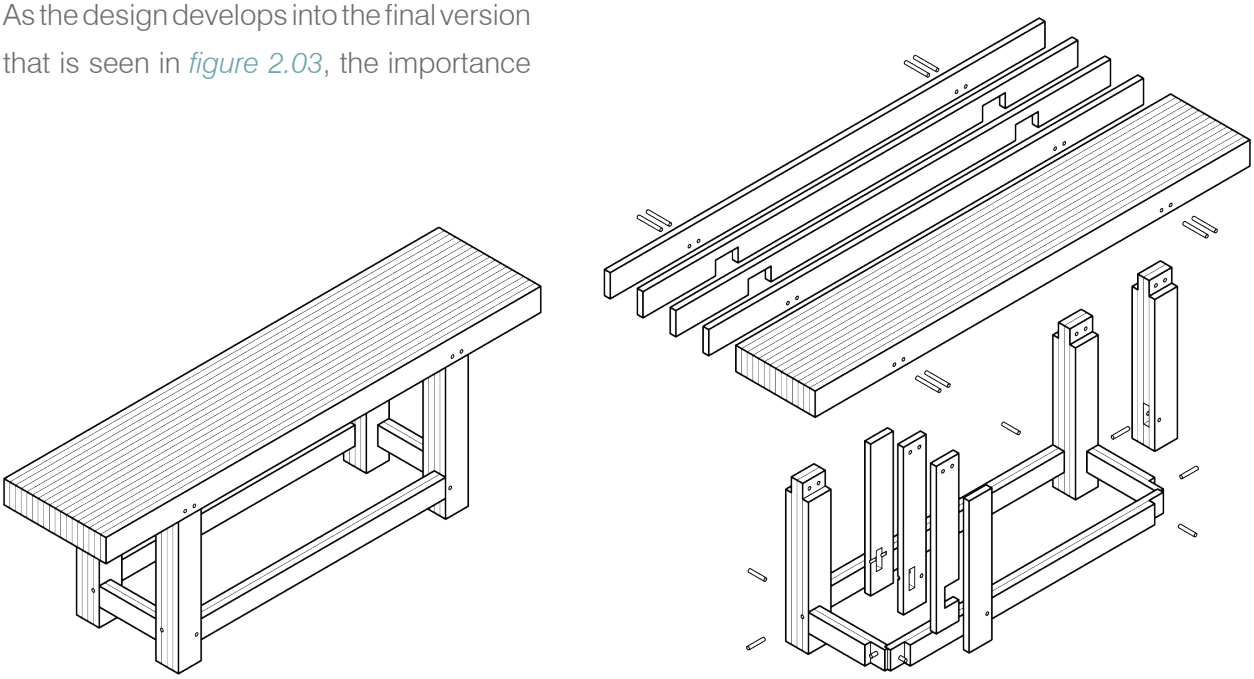

Figure 2.02

the bench-top where the holdfasts would be used to brace the work that is being planed down.[11] After thoroughly following the design and construction process the bench was then modeled and pulled apart in the exploded isometric to understand and apply the tips and tricks to the final design of the workbench for this thesis.

The final style of workbench that is being analysed is the cabinetmaker's workbench but more specifically the Ulmia design. Considered the highest evolved workbench with the level of intricacy and detail in the joinery and construction, it came about in the early 19th century.[12] There are again both pros and cons to this specific style, the positives are, how it can hold work well for a large variety of different woodworking operations and joinery creation as well as the handy tool tray in the back of the bench. The problems arise in how complex the construction is to execute, resulting in very bad benches if made improperly, also it is not ideal for working on larger pieces such as doors.[13] This was modeled and drawn In *figure 2.04*, you can see the level of intricacy in the exploded isometric as well as the variety the clamps offer in regards to holding work.

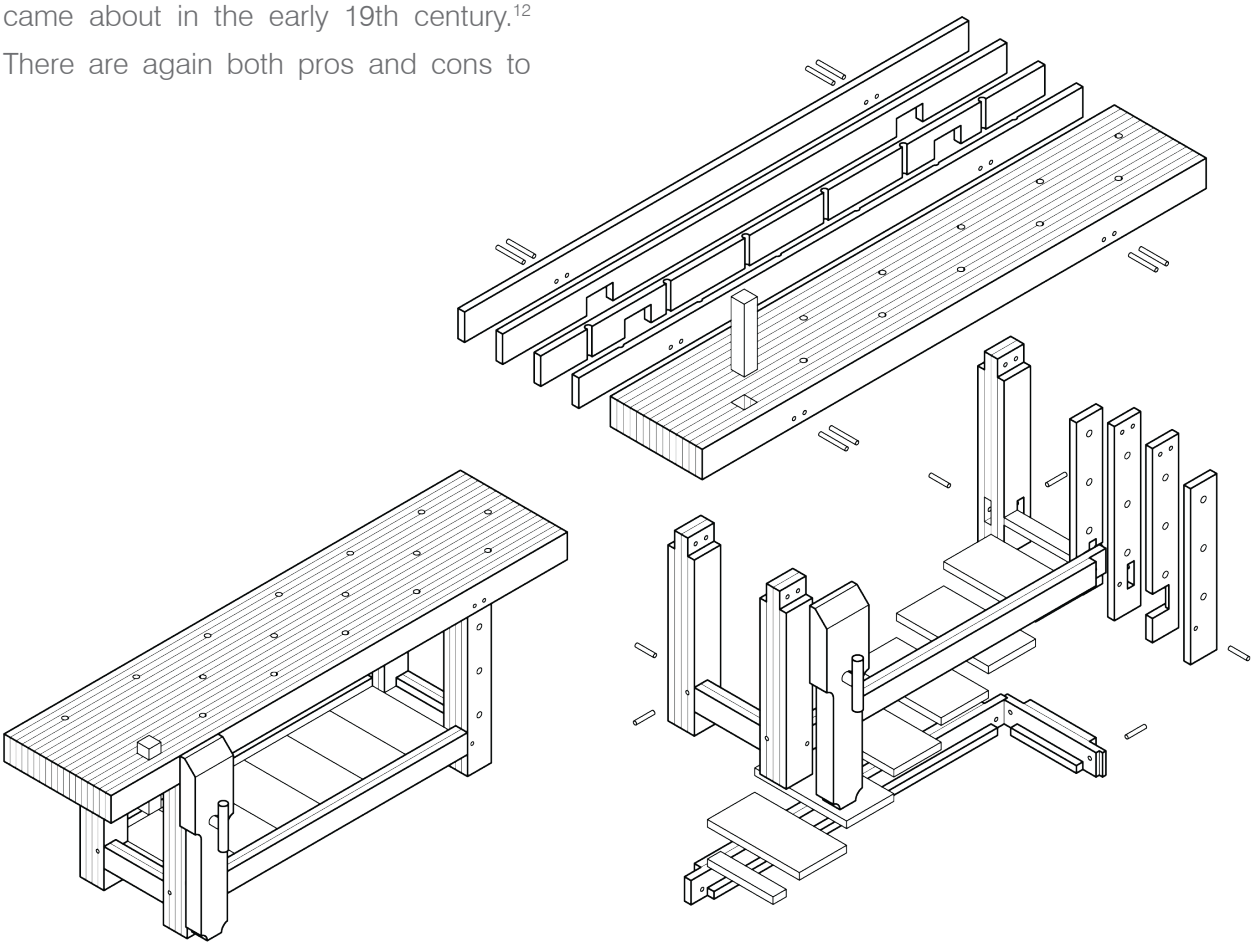

Figure 2.03

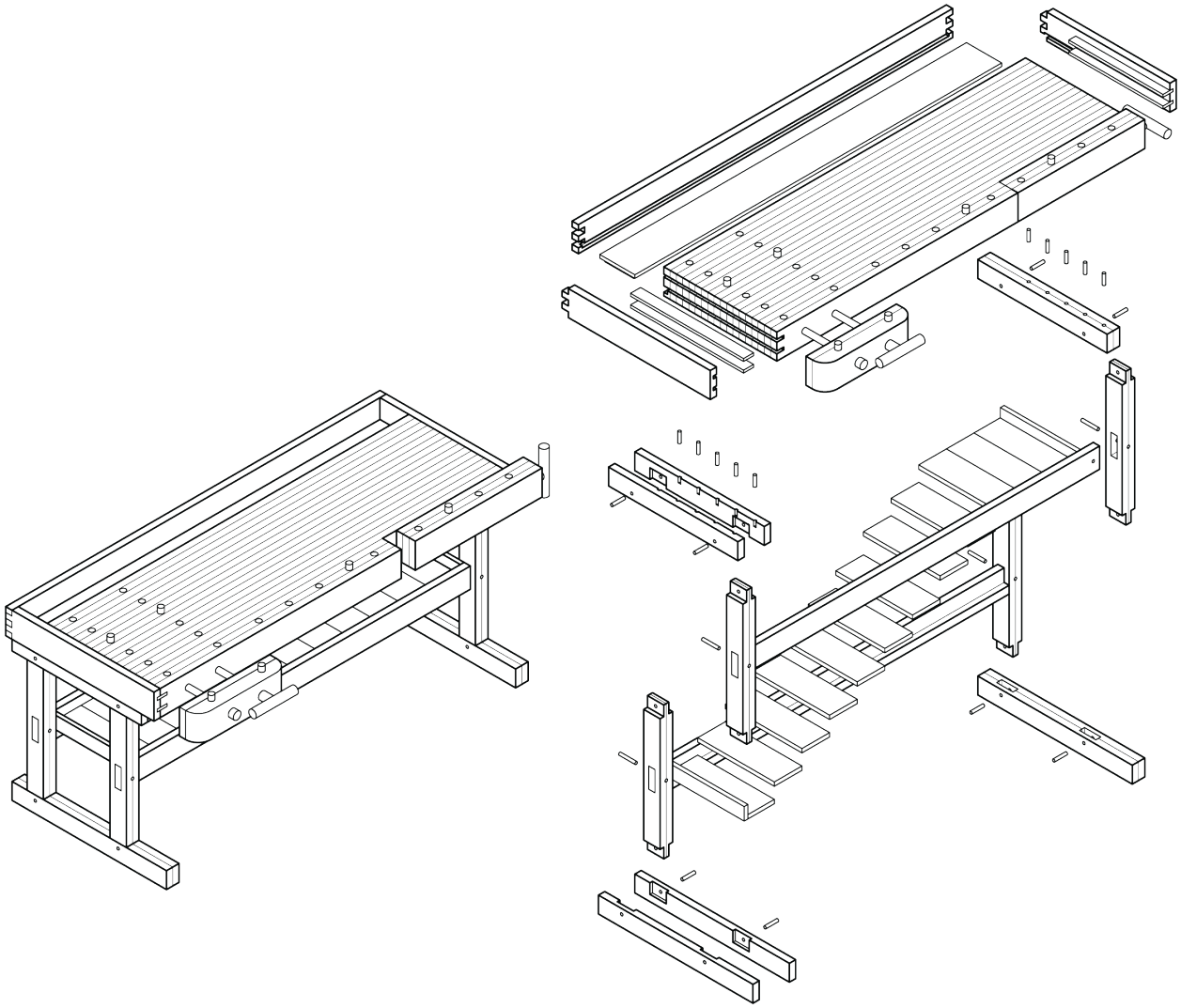

Figure 2.04

2.2

PLANNING & DESIGN

After doing a review of the different possible styles of workbenches, learning from their construction techniques and their optimal uses, the design of the workbench for this thesis starts to be developed. Parameters were set before the design process was started, it will use locally sourced wood, be able to be taken apart for the ease of transportation, can only be connected through wood joinery, no metal fasteners, and no glue used. As this process develops, it hints at how it will then influence and inform the design and construction of the final architectural project of this thesis.

Working within the parameters, the first iteration of the workbench was modeled as seen in *figure 2.05*. The level of intricacy was influenced by the cabinetmakers style

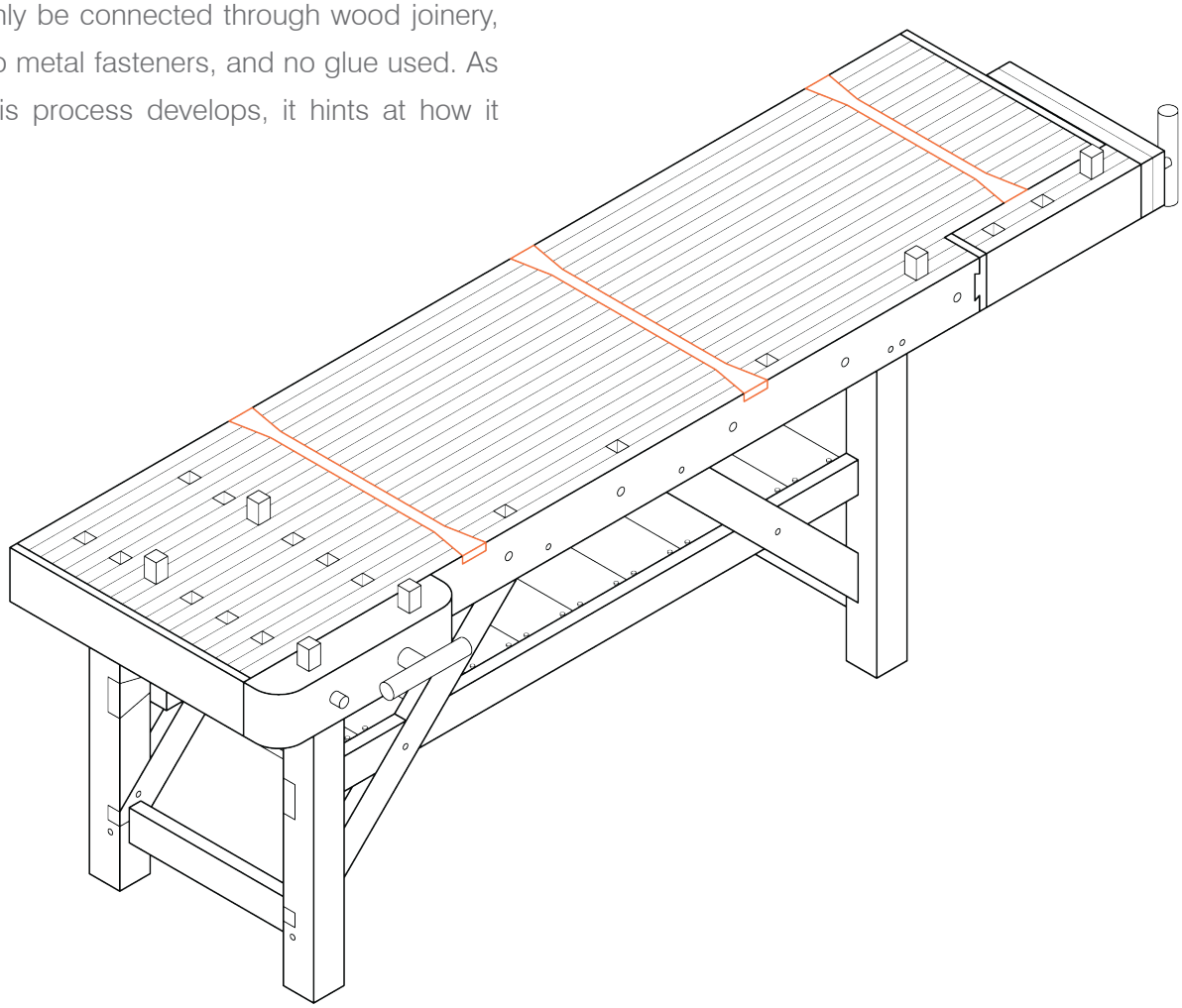

Figure 2.05

and even surpassed in an attempt to only use wood joinery that didn't involve the use of glue. The top slab is dowel laminated instead of a regular glue lamination; this presented its own unique set of problems. The workbench surface needs to be quite a smooth finish but the dowel laminated technique for the bench top doesn't do well against fighting back against the expansion and contraction of the wood.

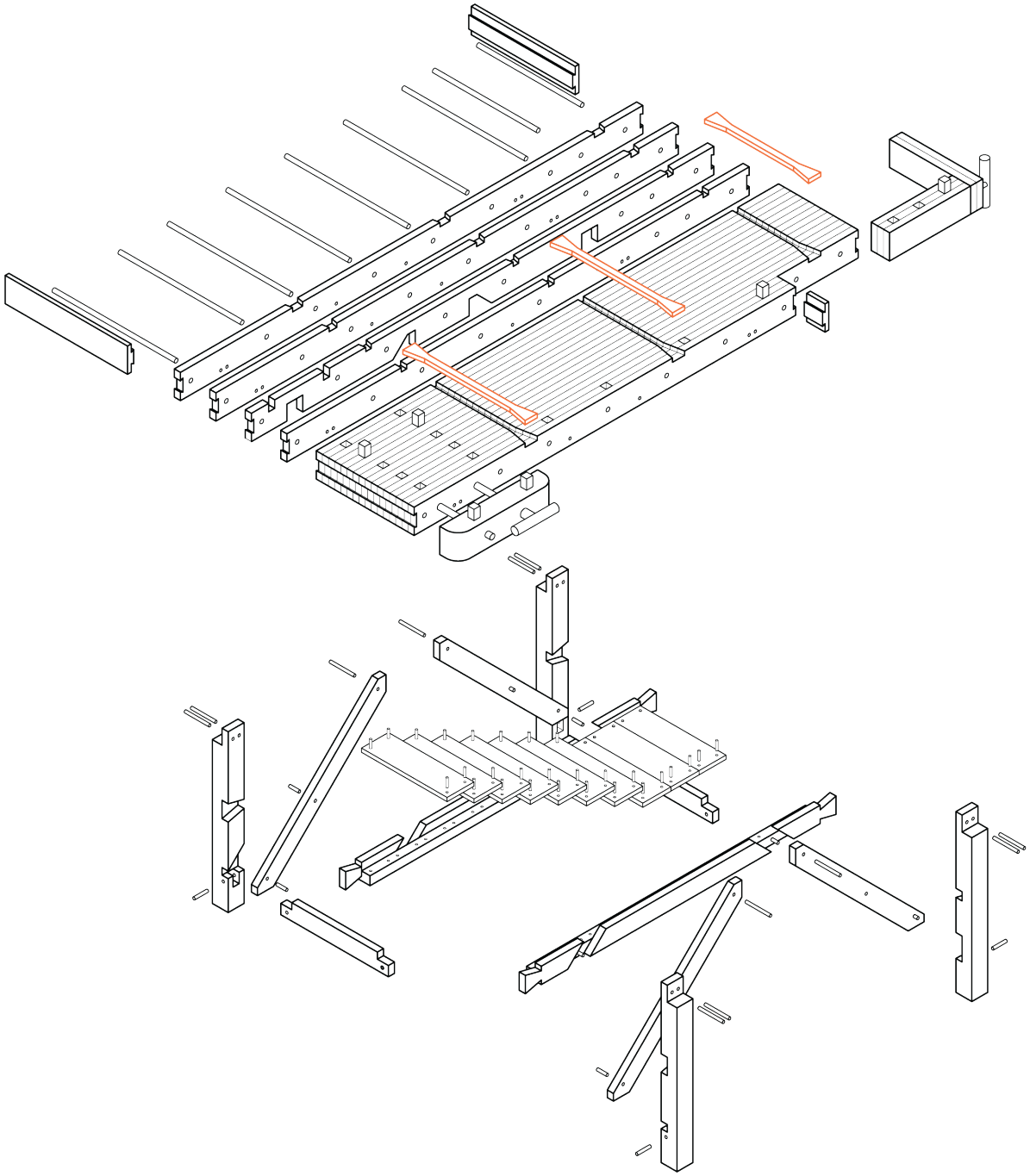

Figure 2.06

In *figure 2.06*, you can see the use of these custom designed dovetail ties that were meant to sit in the workbench and prevent it from delaminating by fighting the expansion of the wood.

The problem with the first iteration is how the timber framing seemed to be informing the workbench instead of the workbench informing the architecture as intended through this thesis. There was too much unnecessary complexity and not enough support in controlling the expansion and contraction of the wood. The dovetail tracks embedded in the surface of the workbench won't work as it will end up causing an uneven surface. The ability to collapse the workbench was not realistic with this iteration either.

This second iteration is much closer to what I wanted as well as having a much more logical system to be able to make it collapse for portability. The design was no longer influenced by timber framing style and using the removable wedged mortise and tenon as well as the removable pegs connecting the tabletop to the legs the workbench design is much more portable and easier to collapse. In *figure 2.07*, you

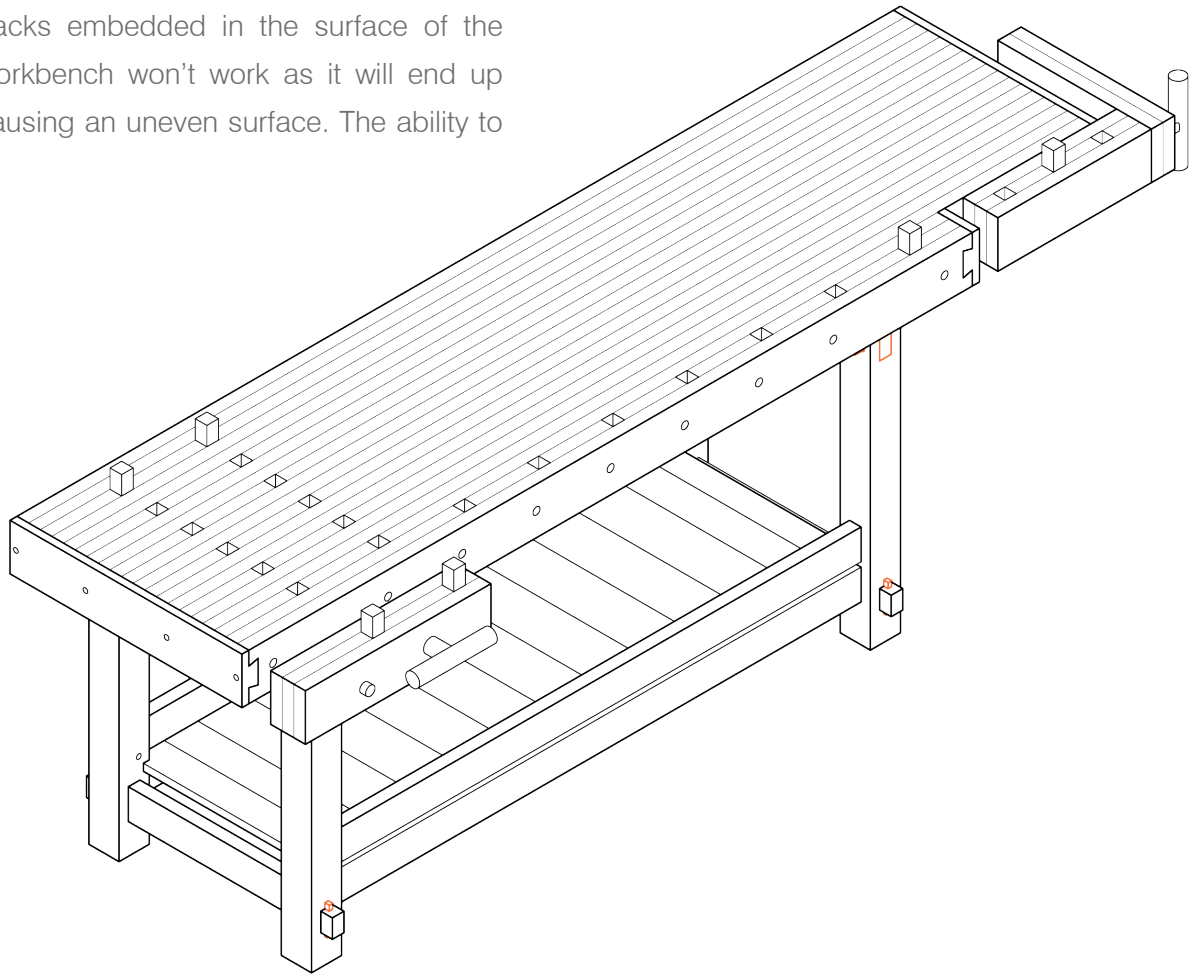

Figure 2.07

can see the wedges highlighted orange where they can be driven in to make it tight or knocked out for collapsibility. The joinery was much more refined as well as the thinking through the construction process of the DLT table top. The mechanism of the elongated bowtie joint was moved to the stretchers highlighted in orange in *figure 2.08*. These connect the legs to the table top, in doing this it helps to ensure the outer members will stay in place through the dovetail joint and stop it from delaminating. This issue of the table top delaminating was the biggest problem that was then addressed in the third iteration.

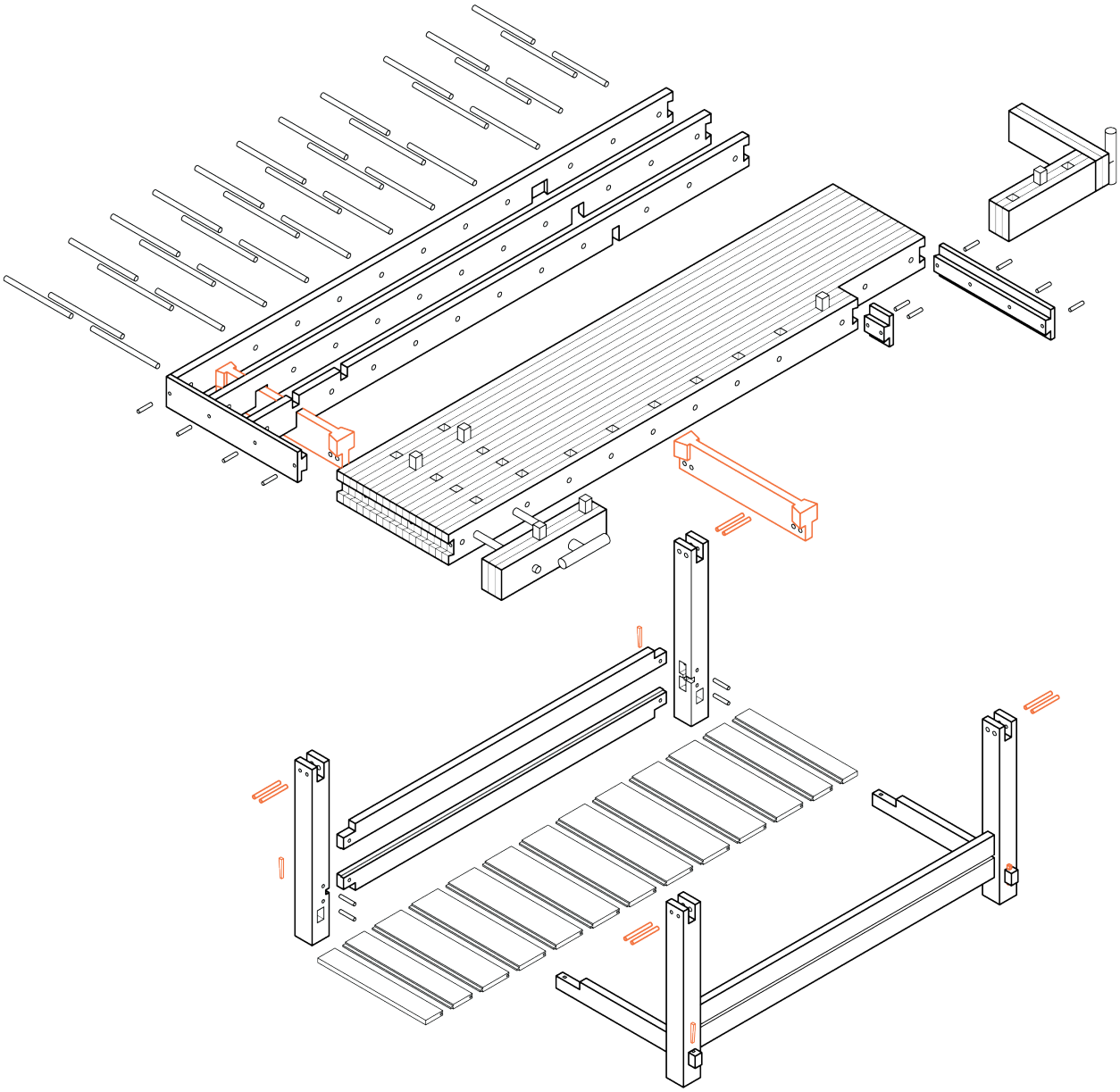

Figure 2.08

In the third iteration, I have almost perfected what I want to achieve in the workbench design. Meeting all the parameters I set for myself with the tabletop being removable from the legs and the legs can come apart in the shortest direction allowing it to be packed flat on the ground. Highlighted in *figures 2.09 and 2.10* the dovetail tracks are slotted to control the expansion and contraction of the wood and to help prevent the delamination of the DLT slab. The bread board ends are also pegged closer to the center as to not break the dowels from the expansion and contraction but still stay in place. The individual members of the table top also have relief cuts to help keep a clean finish on the surface. This iteration was focused on working with and containing the expansion and contraction of the wood as much as possible in a DLT lamination.

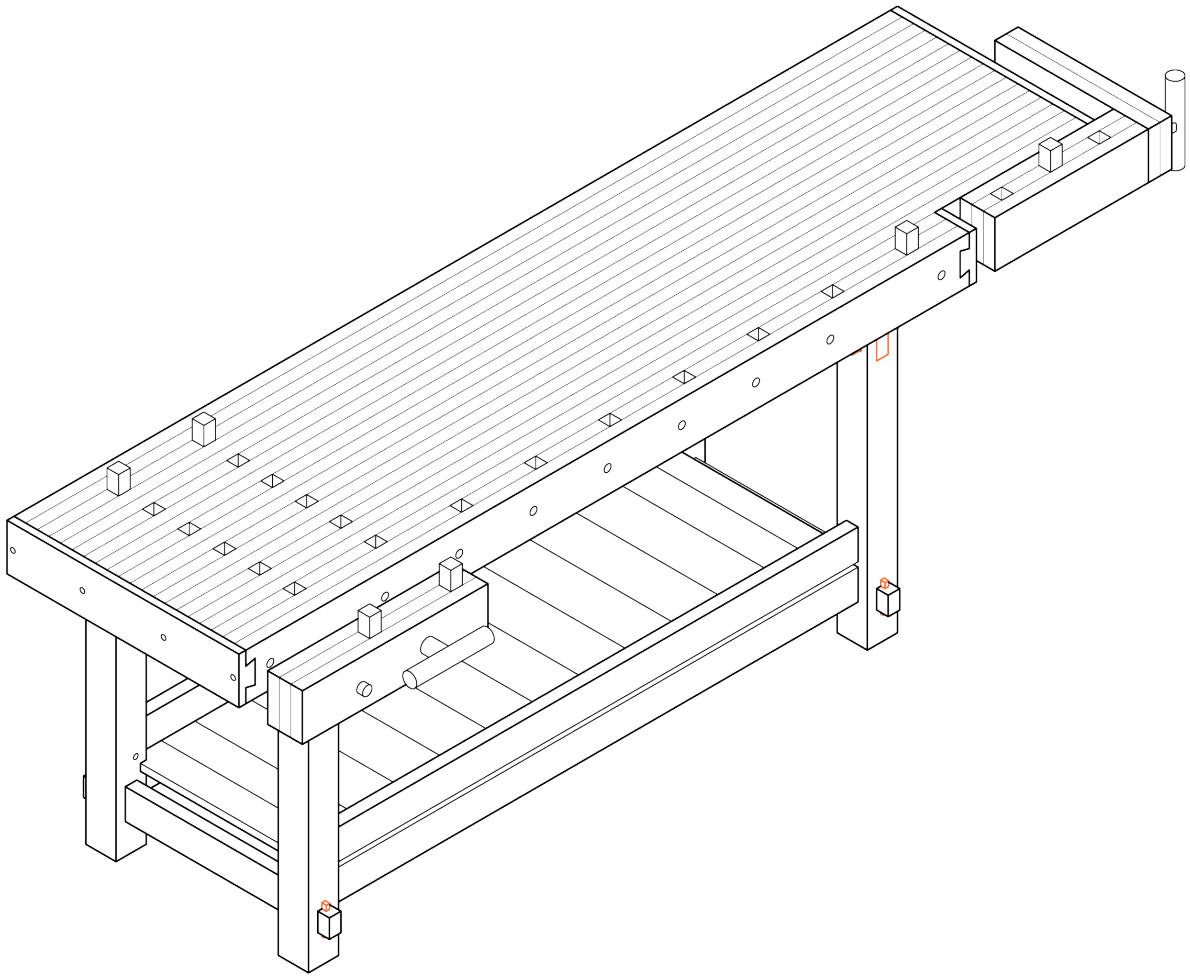

Figure 2.09

The few remaining problems with this iteration are that there are too many dowels than needed, the locked dovetail track requires too much precision to preform properly, and the breadboard ends need a double dovetail track instead of one large one.

The final design of the workbench was fully developed after the materials had been dressed and squared off at consistent sizes to allow the final drawings to be as accurate as possible. In this final version, there is a level of understanding of the material incorporated into the design. This was a result of learning through making as I went through the dressing process.

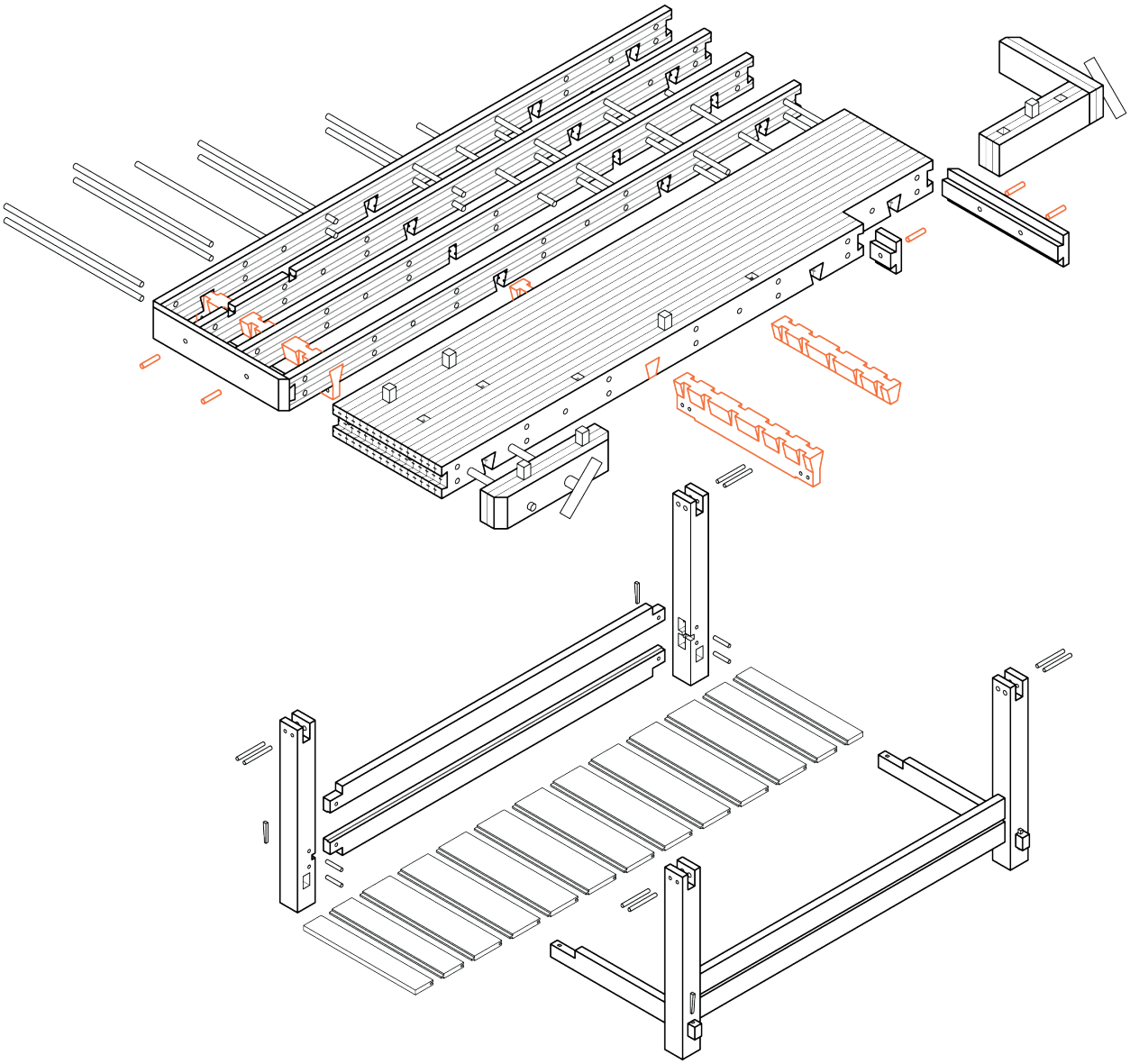

Figure 2.10

I realized just how dynamic and almost alive the wood felt as I was working with it; gaining a better understanding of how the wood expands contracts and warps based on its grain.

As seen in *figures 2.11 and 2.12*, there were a few major changes made in the dowel positioning, size and number of them. Where now there is the incorporation of angles dowels alongside the perpendicular dowels to lock the wood in place through friction. To help hold the perpendicular dowels in place a split wedge was introduced. The dovetail tracks of the legs and the central one is now smooth, to allow for them to be inserted with ease and hold the tabletop in rigid position. Lastly the breadboard ends are a double dovetail track to keep them flush with the ends as only one would allow them to rock too much. The workbench is the focus of the learning through making process and is to be made completely without glue, metal fasteners and uses locally sourced materials. The process of designing and building such an intricate piece of furniture will then inform the architectural design and construction process.

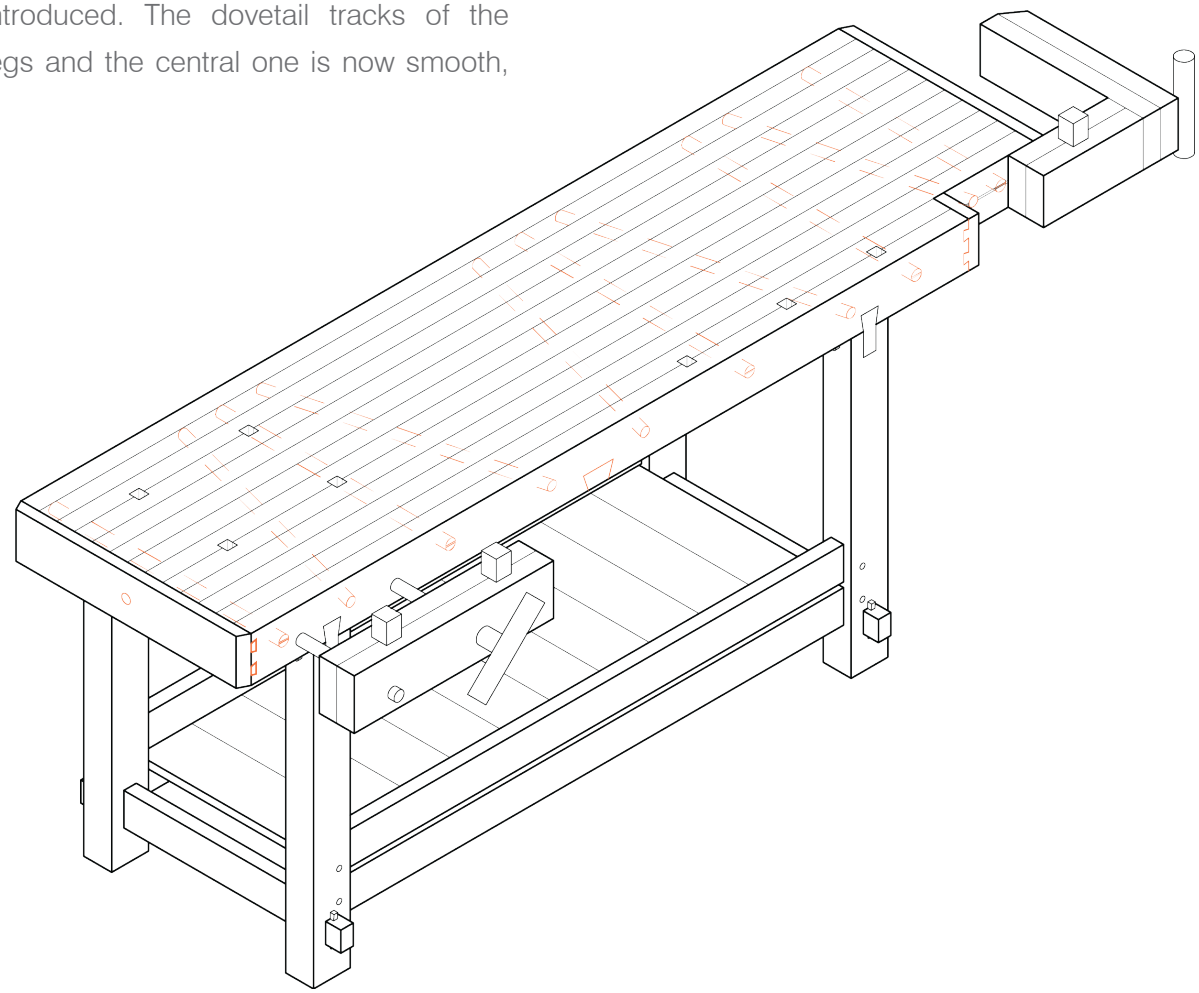

Figure 2.11

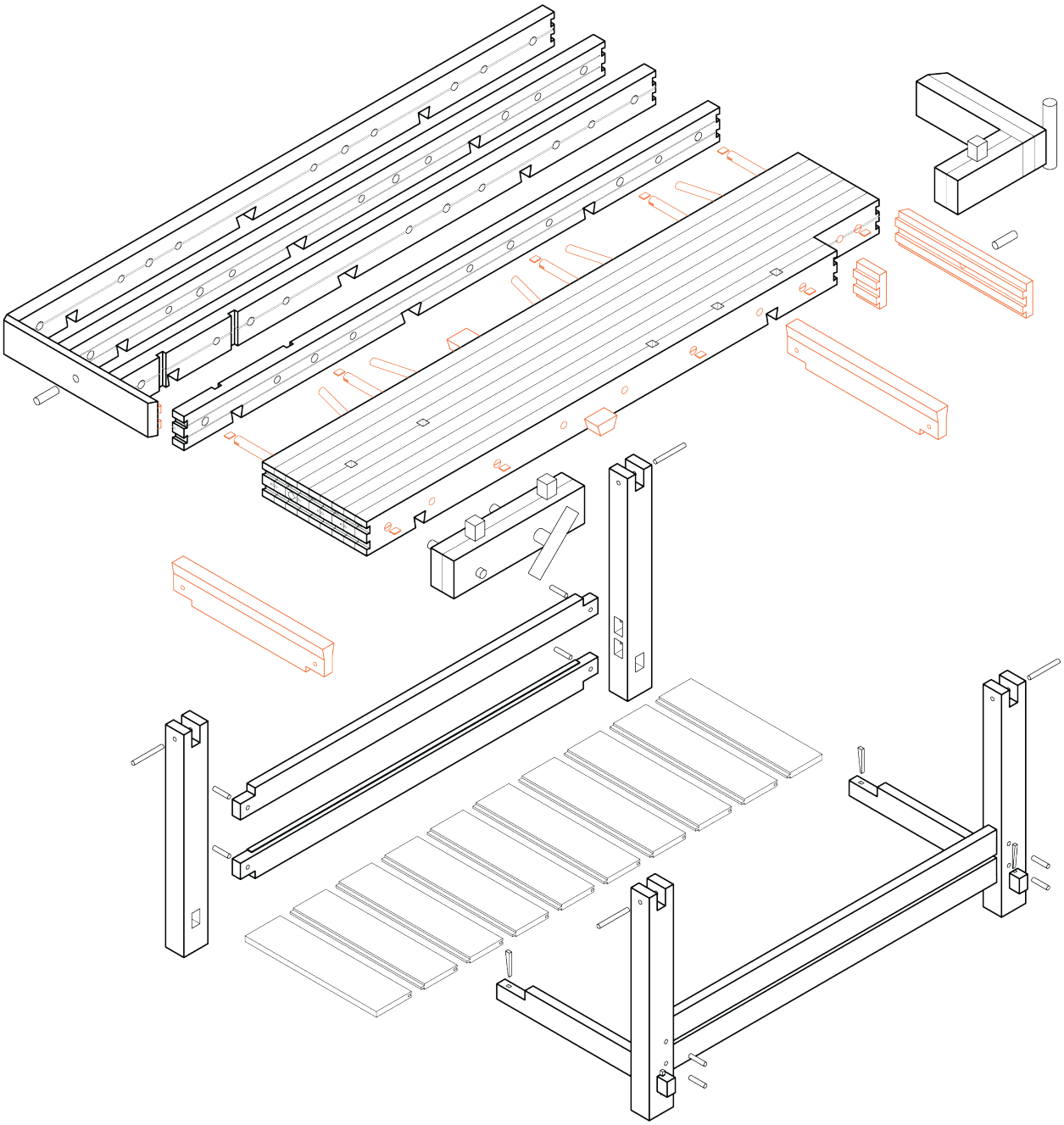

Figure 2.12

2.3

MAKING

The making process of the workbench starts with the physical experiments that test the DLT design and construction of the top slab of the workbench to see how well the outer most wooden members hold up against delaminating due to the expansion of the wood. This is a very important experiment to do prior to the construction of the workbench, to allow for learning through making before the finished product is completed. Following this overarching theme of learning through making, this lesson can be applied to architectural design where scaled prototypes of the joinery being used in the final project could be made prior to the construction of the building. Refer to *figure, 2.13 and 2.14*, to see the initial DLT test where it was feasible to be accurate enough with the tools at hand to make it, but it would not stay together. The friction of the dowels was not enough to keep the individual pieces from sliding along the dowels as I did not have enough control over the moisture content in the dowels, I couldn't expand the dowel to increase the friction and locking the individual members in place, like they do in the industry.[14]

Figure 2.13

To solve the issue of the DLT from sliding apart, the addition of diagonal dowelling along with a friction fitted dovetail track was added. The lamination of the table top will not be separating as it is all locked together through internal friction and opposing forces of the angled dowels to the perpendicular ones. In *figure 2.15, 2.16 and 2.17*, you can see the addition of the dovetail track as well as the angled dowels. The angled dowels make it so that the individual wooden members cannot slide along the length of the perpendicular dowels as they end up fighting each other, resulting with the piece staying in place. The addition of the dovetail track helps to add rigidity to the individual pieces from heaving as the wood expands and contracts. The mock up of the top slab is achieved with a very high degree of success. After completing these experiments, the design of the workbench was tweaked to have angled dowels as well as removal of the notches from the dovetail tracks for the final design itteration of the workbench.

Figure 2.14

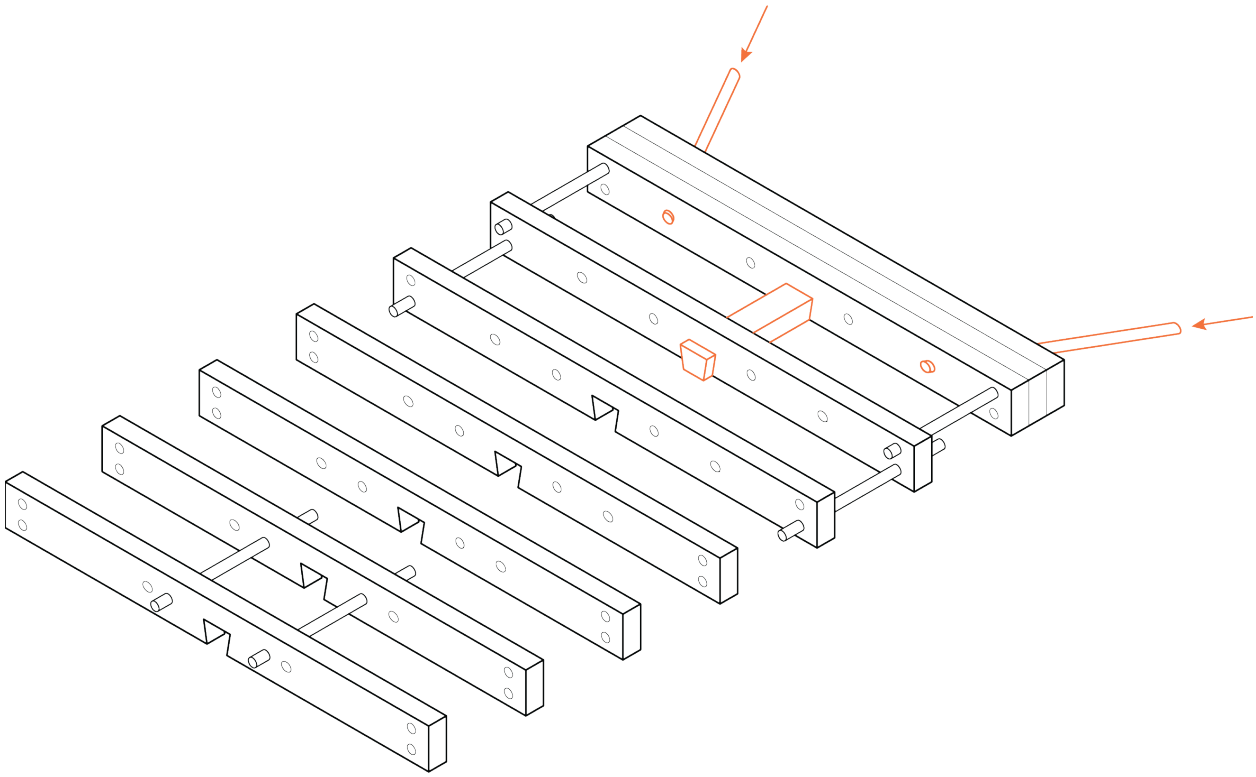

After the design of the workbench was updated from the learning through making of the mock-up in *figure 2.16 and 2.17*, the next step was to purchase the lumber from a local lumberyard. Locally sourcing wood is an important factor as it makes the project more sustainable and supports the community where it is being made. This can translate up to the architectural scale where the materials should be locally sourced to improve the community as well as make the project more sustainable. The selection process of the wood entailed more thought and care than I had originally assumed. At the lumber yard I was able to select each individual piece of wood from their supply, which allowed for me to be thorough in analysing each piece. I had to find the most straight and least warped ones as possible, considering the dressing process of the wood. Where depending on the imperfections in the wood, whether it was warped, had a large knot, a large crack or just an irregular edge, the finished and cleaned piece of wood would still be able to be the size I needed. This helped inform the understanding of the limitations

Figure 2.15

Figure 2.16 / Figure 2.17

in the architecture regarding the realistic number of imperfections in the wood when working with a local supplier. This helped to inform the design of the woodshop, where I would design it understanding that the material, I was using is very dynamic and imperfect, allowing for tolerances built into the rhino model itself.

In the following four pages, *figures 2.20 to 2.23*, the making process is documented and displayed in chronological order. The fist steps in the making process of the workbench took a considerable amount of time as I had never worked with so much maple before, not realizing how tough a wood it really is. The more time I spent making the workbench the more I realized just how dynamic and unpredictable wood can be. The understanding of the material is one of the most significant influences on the design of the final project and is reinforced throughout the entire making process of the workbench. This also made me realize just how much of an issue there is in our present day where a lot of designers and architects that have not had an opportunity to work with wood as a building material using their hands, lack a holistic understanding of it.

Figure 2.18

I was able to achieve a sense of craft in the finished object as seen in *figure 2.18 and 2.19*, in doing so I gained a deeper understanding of what that truly means. A sense of craft is present in an object, a piece of furniture, or a building when the workmanship of risk is utilised, drawing on the inherent diversity in the wood itself and allowing the natural beauty within the material to be emphasized. After creating something that has a sense of craft, I can now better apply that to the architectural design of my woodshop, focusing on moments where the workmanship of risk can be more prominent in the building.

Another aspect that will translate to the architectural scale is using the beauty in the joinery connections as a form of ornamentation, drawing one's attention to the tectonics and in doing so celebrating the craft of the structure. Some of these details found in the workbench are highlighted in *figures 2.24 - 2.27*.

Figure 2.19

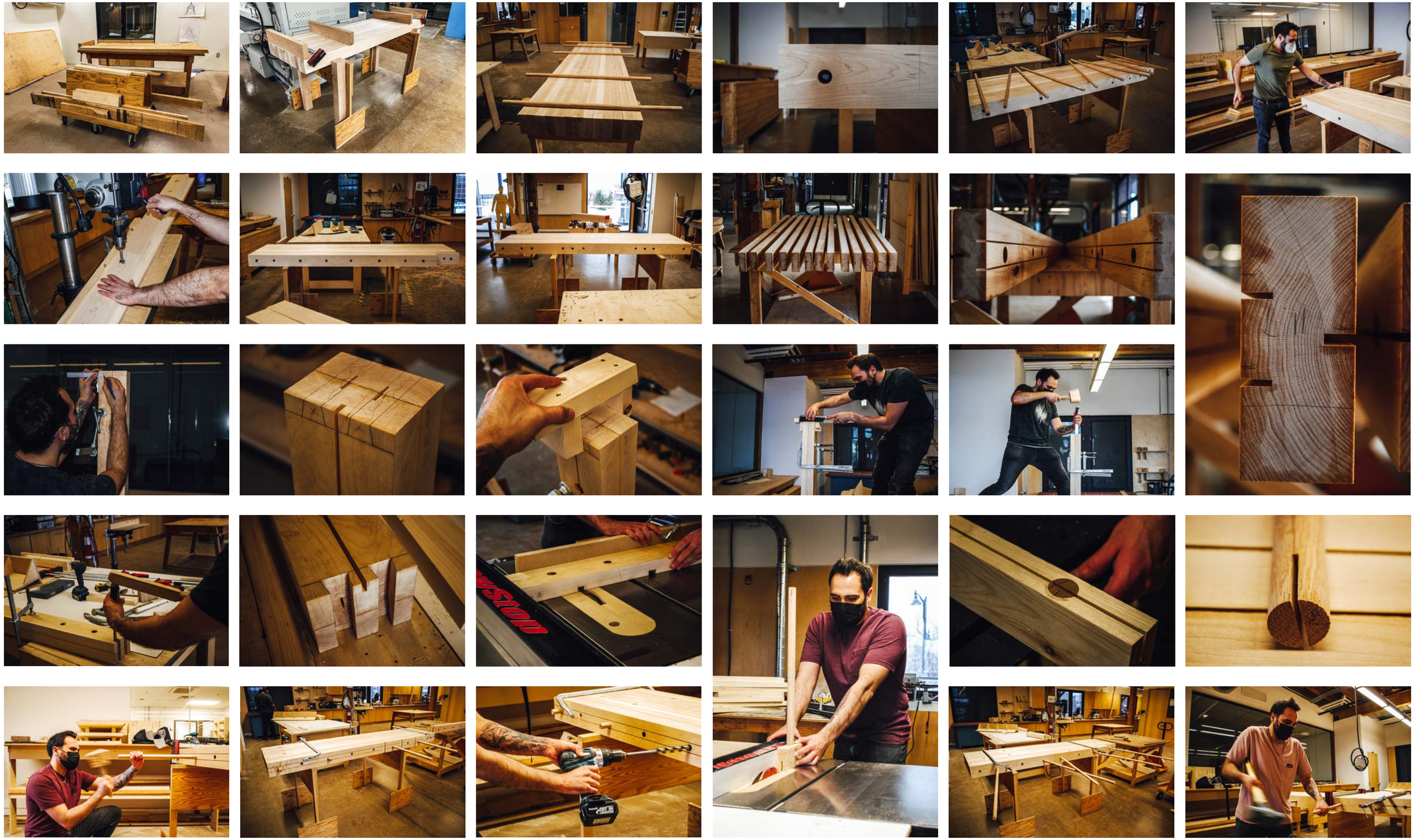

Figure 2.20

Figure 2.21

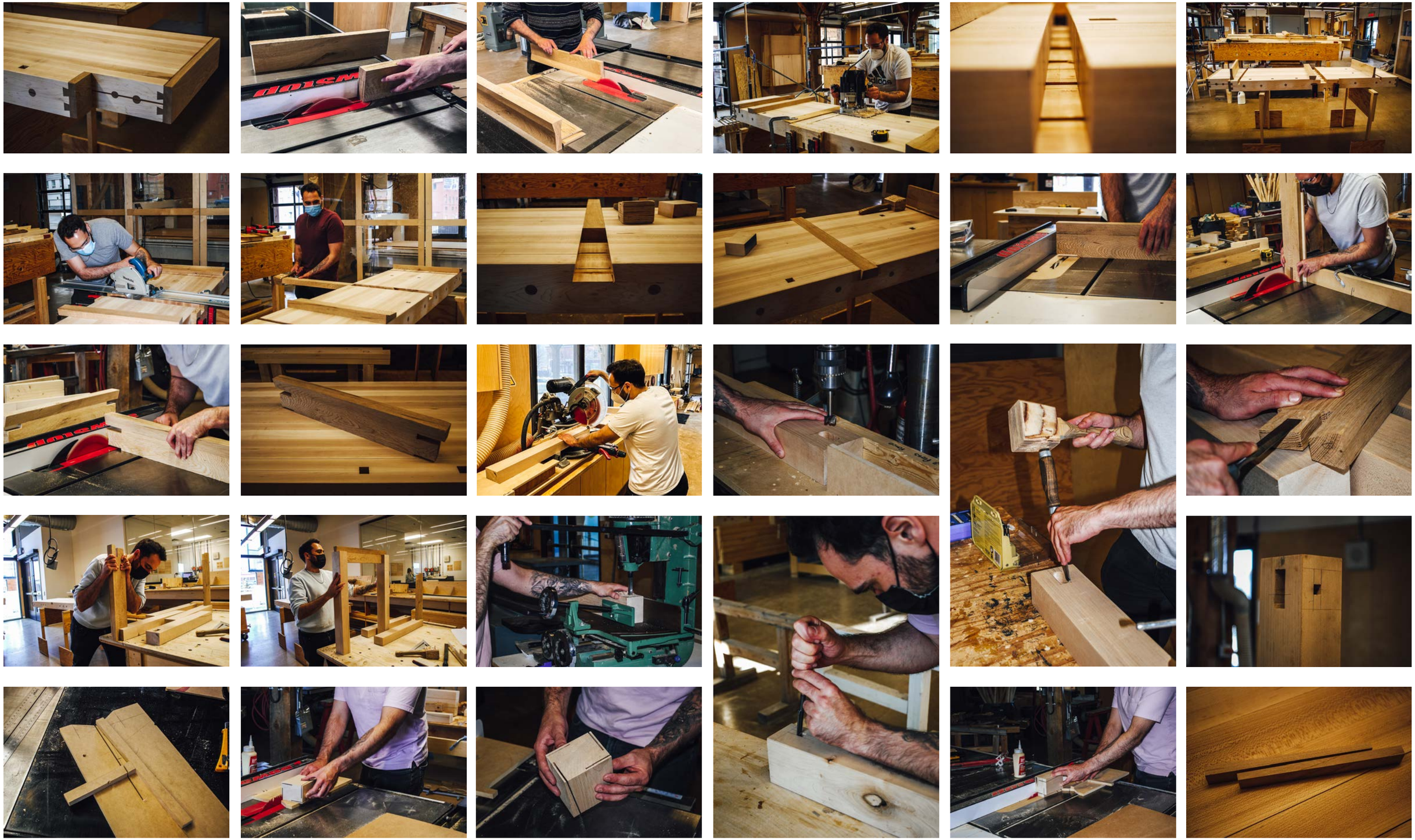

Figure 2.22

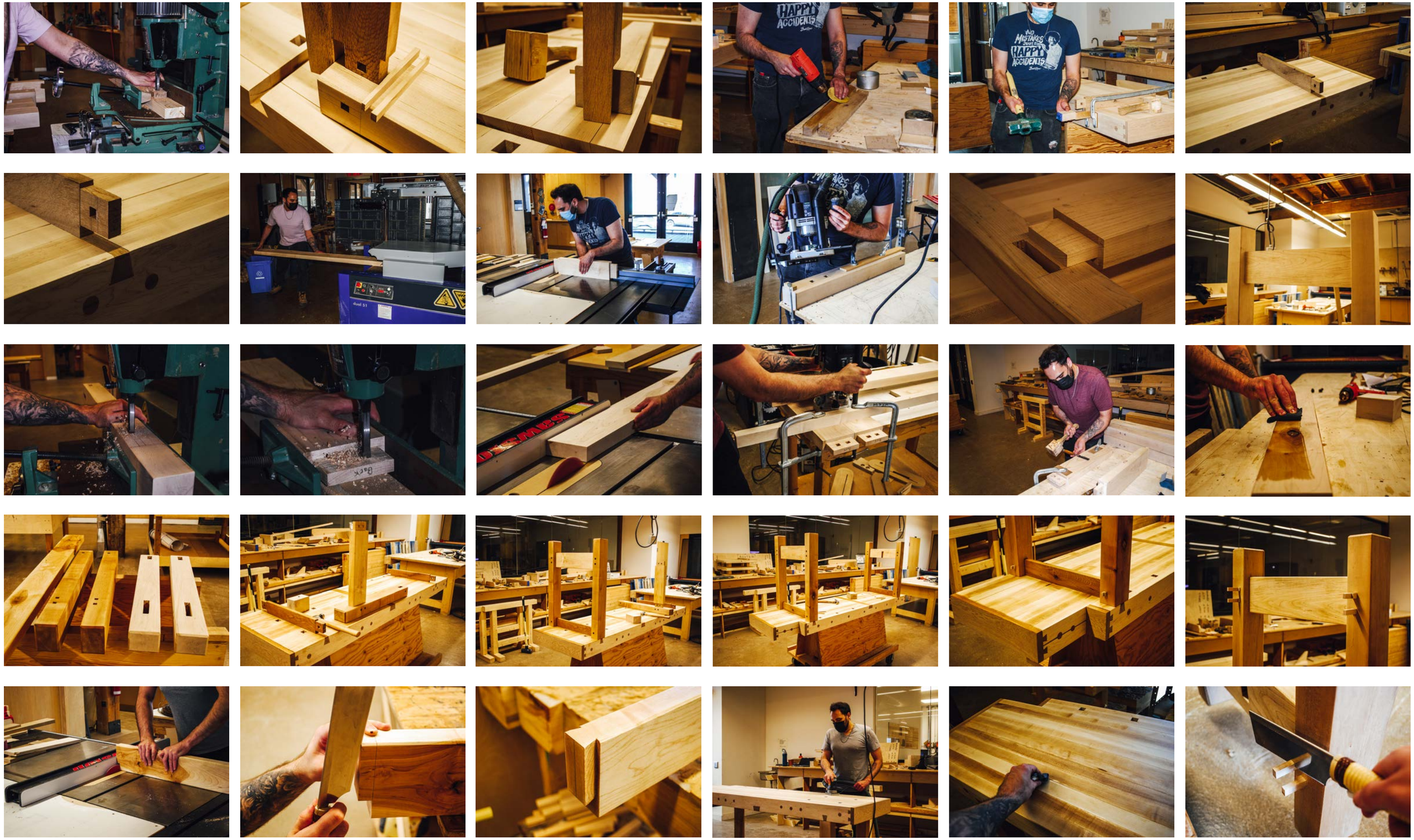

Figure 2.23

Figure 2.24 / Figure 2.25 / Figure 2.26 / Figure 2.27

ENDNOTES

1 Christopher Schwarz, The Anarchist's Workbench (Covington, KY: Lost Art Press LLC, 2020), 10.

2 David Pye, The Nature and Art of Workmanship (Cambridge: Cambridge University Press, 1978), 72.

3 Christopher Schwarz, The Anarchist's Workbench (Covington, KY: Lost Art Press LLC, 2020), 11.

4 Ibid., 35.

5 Ibid., 40.

6 Ibid., 41.

7 Ibid., 38.

8 Ibid., 80.

9 Ibid., 100.

10 Ibid., 113.

11 Ibid., 171.

12 Ibid., 45.

13 Ibid.

14 "StructureCraft DLT Design & Profile Guide © V4.1 – USA," (StructureCraft: Timber Engineer ing & Construction), accessed January 10, 2022. www.StructureCraft.com, 9.

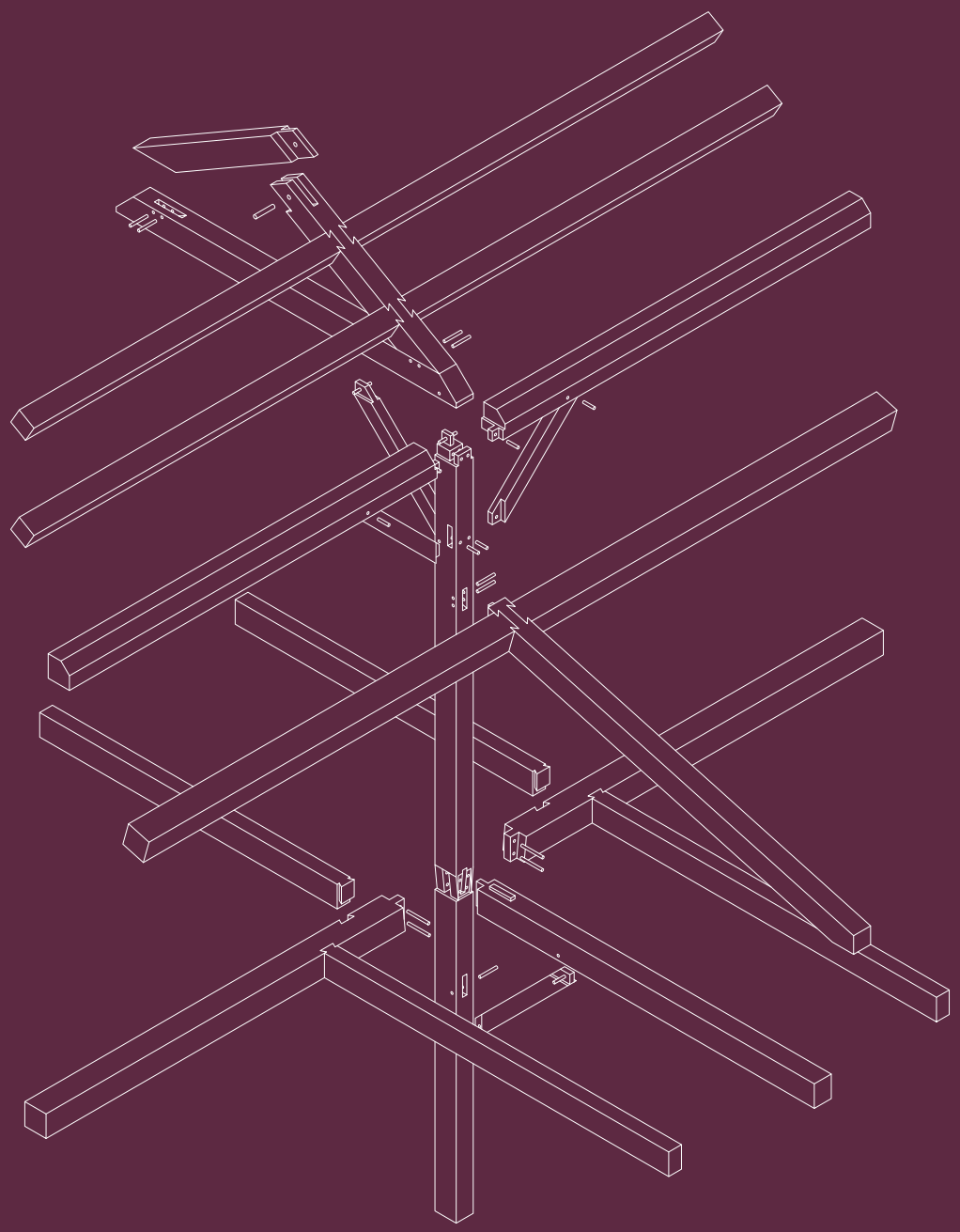

Figure 3.00

03

TIMBER FRAMING

In this chapter, timber framing architecture is explored. This is done through a case study based research process, more specifically working through a series of exploded isometric drawings showing the different buildings and connections being assembled. For the settler timber framing, the focus is on the early architecture found in Canada where a smaller building is drawn to investigate the intricate joinery that can be scaled up. A timber framed barn typology will be the focus of study for the contemporary Canadian timber framing. The complex connections found in Japanese timber framing will be analysed and explored regarding how to incorporate them into the final architecture of this thesis project. What these different areas of focus share is the way that the tectonics of the building utilises the full potential of the material using wood joinery.[1]

3.1

JAPANESE TIMBER FRAMING

There is a plethora of information embedded into the practices and traditions in Japanese timber framing.[2] For example, in the book *The Genius of Japanese Carpentry - Secrets of an Ancient Craft*, goes into detail regarding how the lumber should be used in the direction it grew up and how the north face of the trunk actually produces the strongest lumber and should be milled in that direction.[3] It also goes into detail regarding the elevation of a tree on a hill and how the ones at the top are the strongest, the ones half way up a hill produce tall and thin lumber that are best used for vertical posts and the ones at the bottom of a valley are not good for structural members. These practices are represented in *figures 3.01, 3.02 and 3.03*, where the positioning of the tree relative to the factors described is illustrated.

Not focusing on a building to analyze for this subsection allows for it to be freer and include a wide range of useful information that then can be applied to the final design of this thesis. For example, in the book *The Art of Japanese Joinery*, it starts off with some interesting information regarding the history of Japan and how through the use of wooden architecture they were able to build with such a high degree of seismic activity. This is because wooden construction can handle earth quakes better than stone and masonry construction because of the natural give in the material and the joinery acting as shock absorbers.[4] More specifically, this works "when an external force is applied to a splicing or connecting joint, its energy is often reduced through the internal friction of the joint"[5]. This advantage in absorbing shock through the material and the building connections provides an opportunity to be used in the design of the community oriented woodshop as it is located in the downtown of Sudbury in close proximity to the train tracks. Allowing the building to absorb some of the vibrations from the trains, making it a more enjoyable environment to be in.

Through further investigation, I have learned about how Japanese carpentry utilises the expansion and contraction in their joinery, both from controlling the humidity levels as well as physically compressing the wood in a connection to secure it more. For example, in

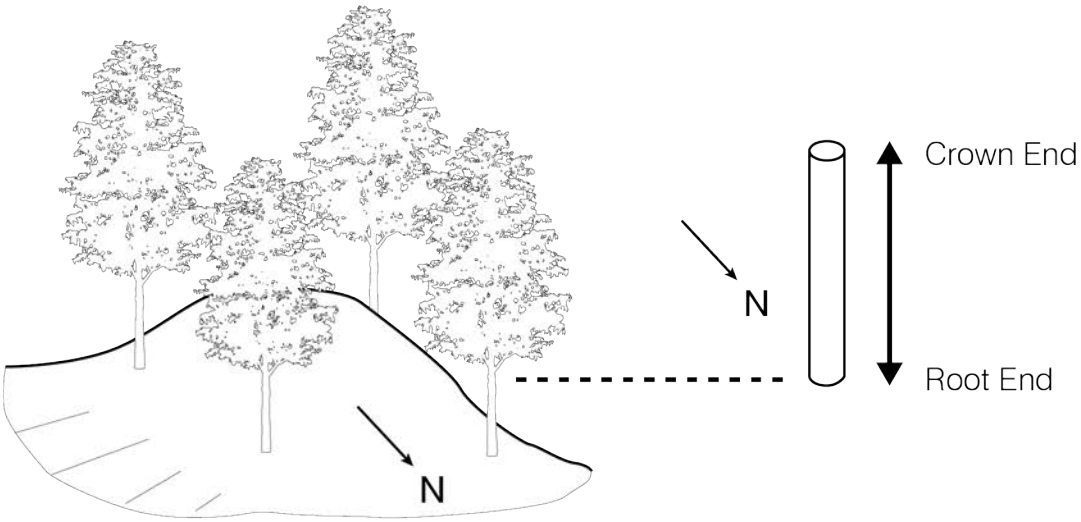

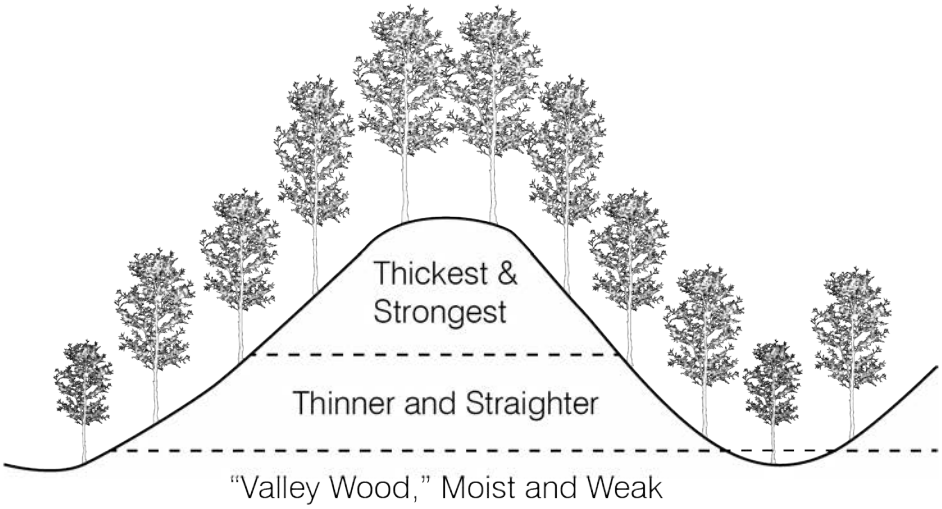

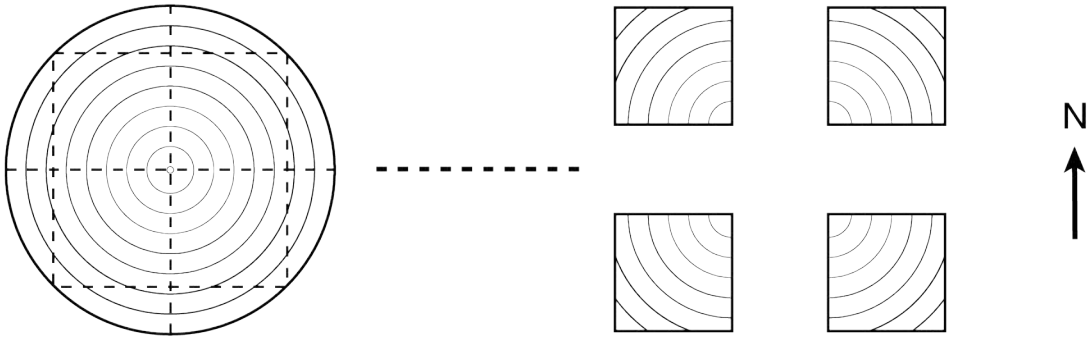

Figure 3.01 / Figure 3.02 / Figure 3.03

a post and beam situation, the joint should have a 2mm gap between the beam and the shoulder of the tenon. This allows for the weight of the roof to compress the tenon to the point where it has expanded completely into the mortise and the joint is perfectly flush, increasing the friction in the connection and making it stronger.[6] In *figures 3.04 and 3.05* this method illustrated as well as a technique used when cutting the angle of rafters that allow the connecting angle to be prefect after the weight of the roof settles it.[7] A skilled carpenter, "kiln-dries his lumber and brings the moisture content down to less than ten percent before he cuts his joints and fits them together, when finished joints are exposed to the air they absorb moisture, bringing their moisture content up to the level of that air-dry lumber"[8]. This same technique will be applied in the construction of the community oriented woodshop, allowing for stronger connections through a natural and sustainable method that utilises wood as a building material and works with the inherit properties of it.

One of the largest take-aways from this research was how resilient wood can be if sized properly when in the case of a building fire.[9] Peoples first reaction when thinking about building materials and how well they preform in the case of a fire is that wood will be worse than steel but that is not the case if done correctly. There are two factors that come into play and the first has to do with the sizing of the wooden member. The larger it is the longer it will last, for example commonly after a fire the 4"x4" and 12"x12" posts and beams remain in place, even if they were badly charred.[10] This is where the second aspect comes into play; wood only starts to burn once it reaches a temperature of roughly 300oC but because it is such a poor conductor of heat. Even when the exterior of a larger member is at a high enough temperature to burn, the interior is not; allowing it to support the intended load even after it has been on fire.[11] Now looking at steel, and understanding its weaknesses compared to wood in a fire, the problem lies with it being a great conductor of heat, "hence, we can say that in a fire wood construction is actually safer than steel-frame construction, bending like soft taffy at 800oC and warping badly at lower temperatures"[12] . This will be carried over into the final design of the woodshop, oversizing the structural members to allow for better fire protection.

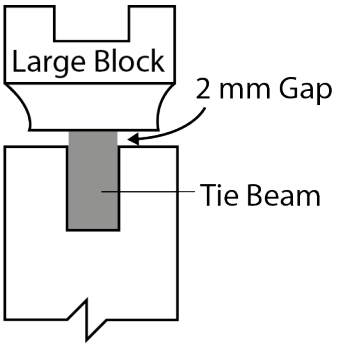

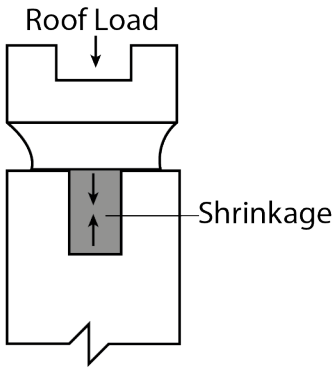

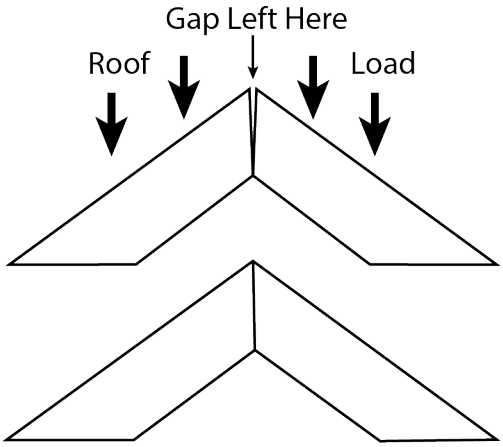

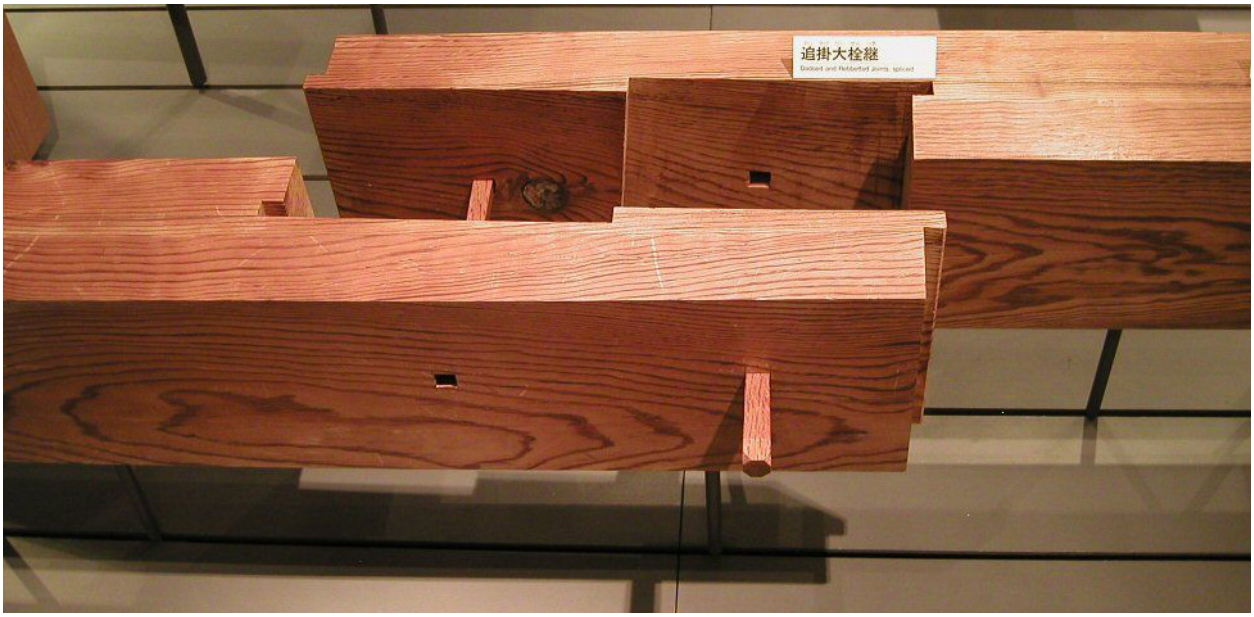

Another aspect of this research that my sparked interest was focused on the complex connections found in Japanese joinery. Splicing joints were the most fascinating as they can pose as a solution to working with smaller lumber by combining two pieces to make a longer one.[13] *Figure 3.06* is an example of a complex splicing joint found in Japanese timber framing. These complex joints will be incorporated into the connections of the final project to allow for the use of solid timbers and avoiding glulam or CLT timber technologies.

Figure 3.04 / Figure 3.05 / Figure 3.06

3.2

SETTLER TIMBER FRAMING

European construction techniques were carried over to Canada when it was first settled, but they weren't adjusted to the local climate. In particular, first-generation immigrants were basing the quality of the design and construction not within the Canadian context but in the context of their homeland.[14] In doing so, some of the techniques that came over did not stand the test of time, but the timber framed construction did as it lent itself to Canada's climate.[15] There are many interesting and unique construction techniques used in the historic timber architecture of Canada including, colombage pierrote (half timber), poteaux en coulisse (grooved posts), heavy-frame, medium-frame, post and grove, madrier (plank), post and rail, buttress-frame and post, beam and plank frame construction.[16]

Beginning with poteaux en coulisse (grooved posts), this is one of the most important methods of construction used in early Canadian history.[17] If you include the derivatives of this construction type, it has been used by French Canadian builders for about 300 years of constant use.[18] A small house was modeled in this style to then be then used to create a series of exploded isometric drawings pulling it apart and reassembling it, creating a better understanding of the connections and construction process of this style. You can see in *figures 3.07, 3.08 and 3.09*, the detailed and intricate construction

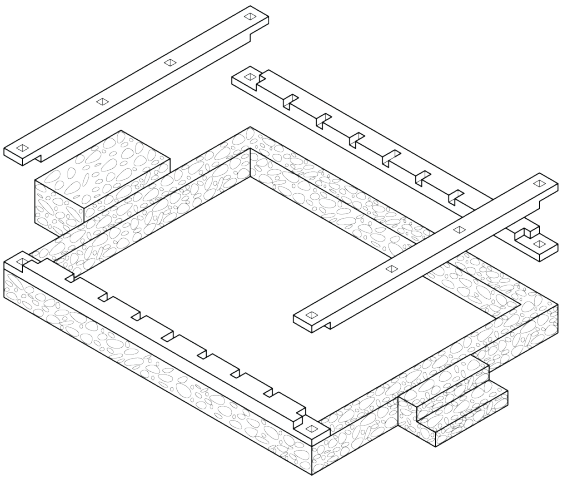

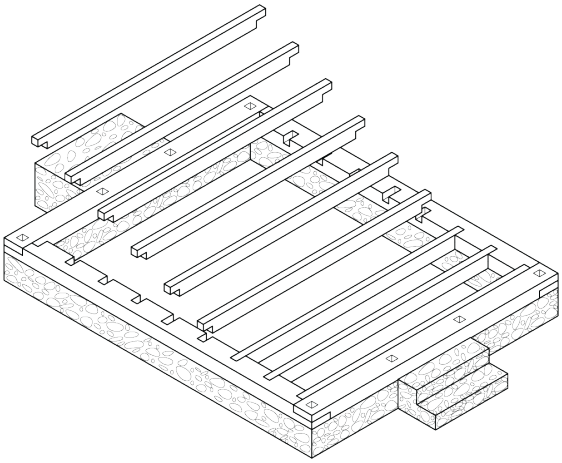

Figure 3.07

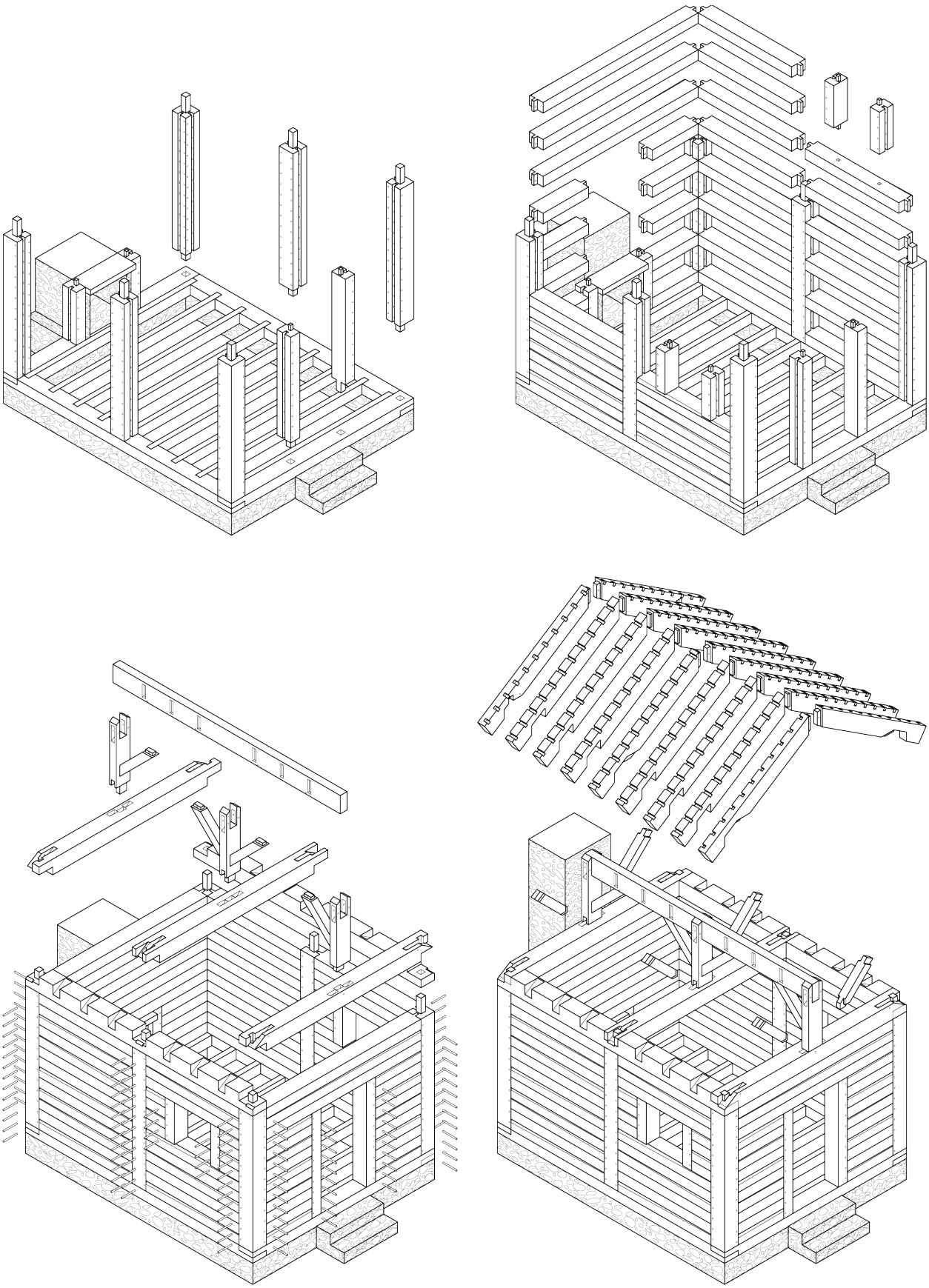

Figure 3.08

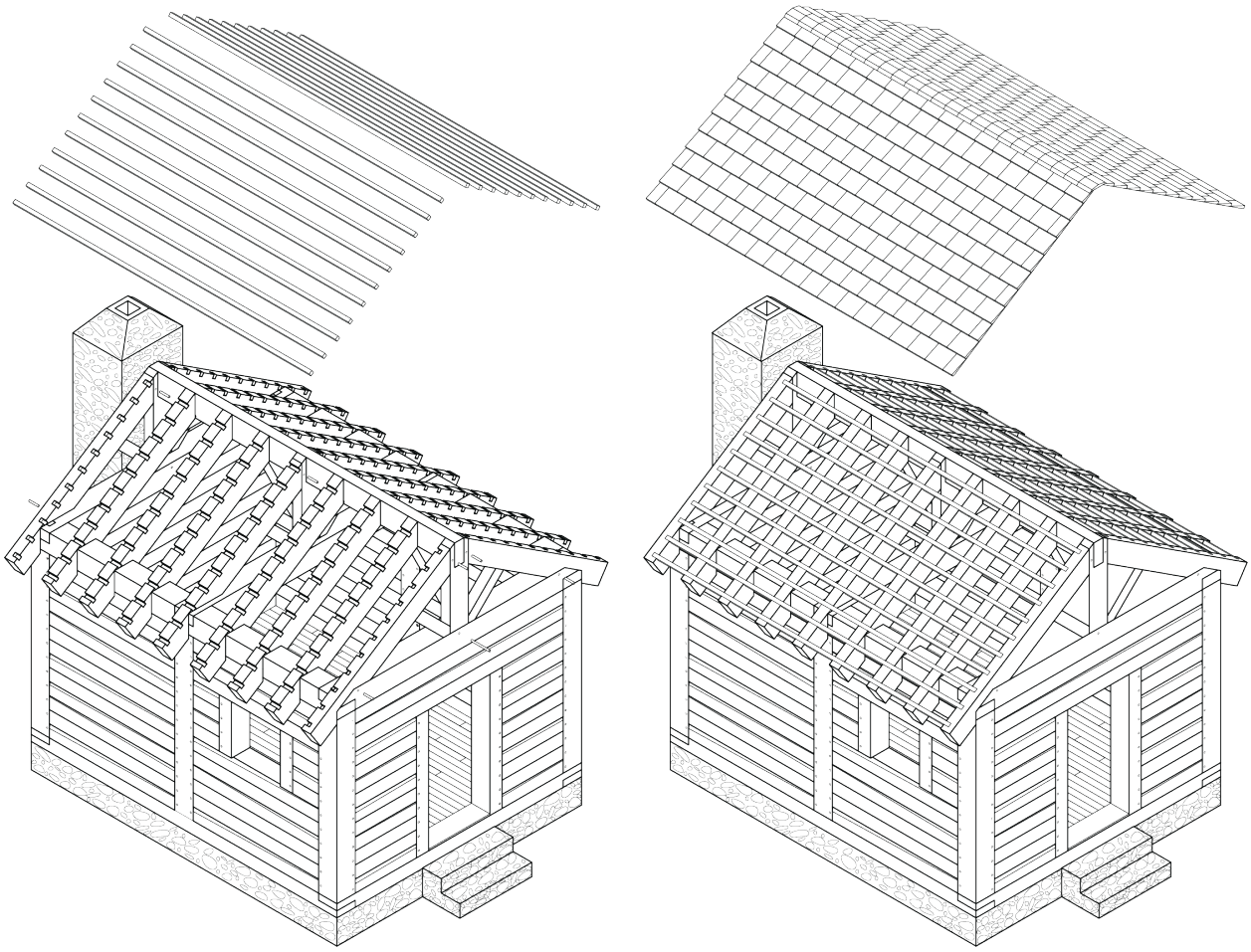

process of this style. The structural system has horizontal logs stacked on each other to fill the spaces between the posts and the spacing between the vertical posts depended on the lengths of the local logs used to build the buildings.[19] There is a surprising amount of detail and intricacy that goes into this construction method as it used wood joinery instead of metal fasteners or glue, making it a perfect one to learn from and inform the final design of this thesis.

After meticulously rebuilding through the isometric drawings, you can see the completed house in *figure 3.10*. This was done in a smaller scale to clearly communicate the intricacy of the construction process. There are many interesting techniques used; such as the tracks in the vertical posts where the horizontal members were pegged and locked into them, providing increased lateral stability support in the walls. Another interesting technique that can be taken

Figure 3.09

away from this is how the bottom sill plate of the wall is being notched out to house the floor joists seen in *figure 3.07*, allowing for there to be no need for a metal fastener. Moreover, the corners of the bottom sill plates are lap jointed and then the corner posts have a tenon driven through to lock the whole wall assembly in place. This is a moment where the techniques of compression in a mortise and tenon joint from Japanese carpentry can be incorporated with settler construction to create an effective contemporary construction for the community oriented woodshop.

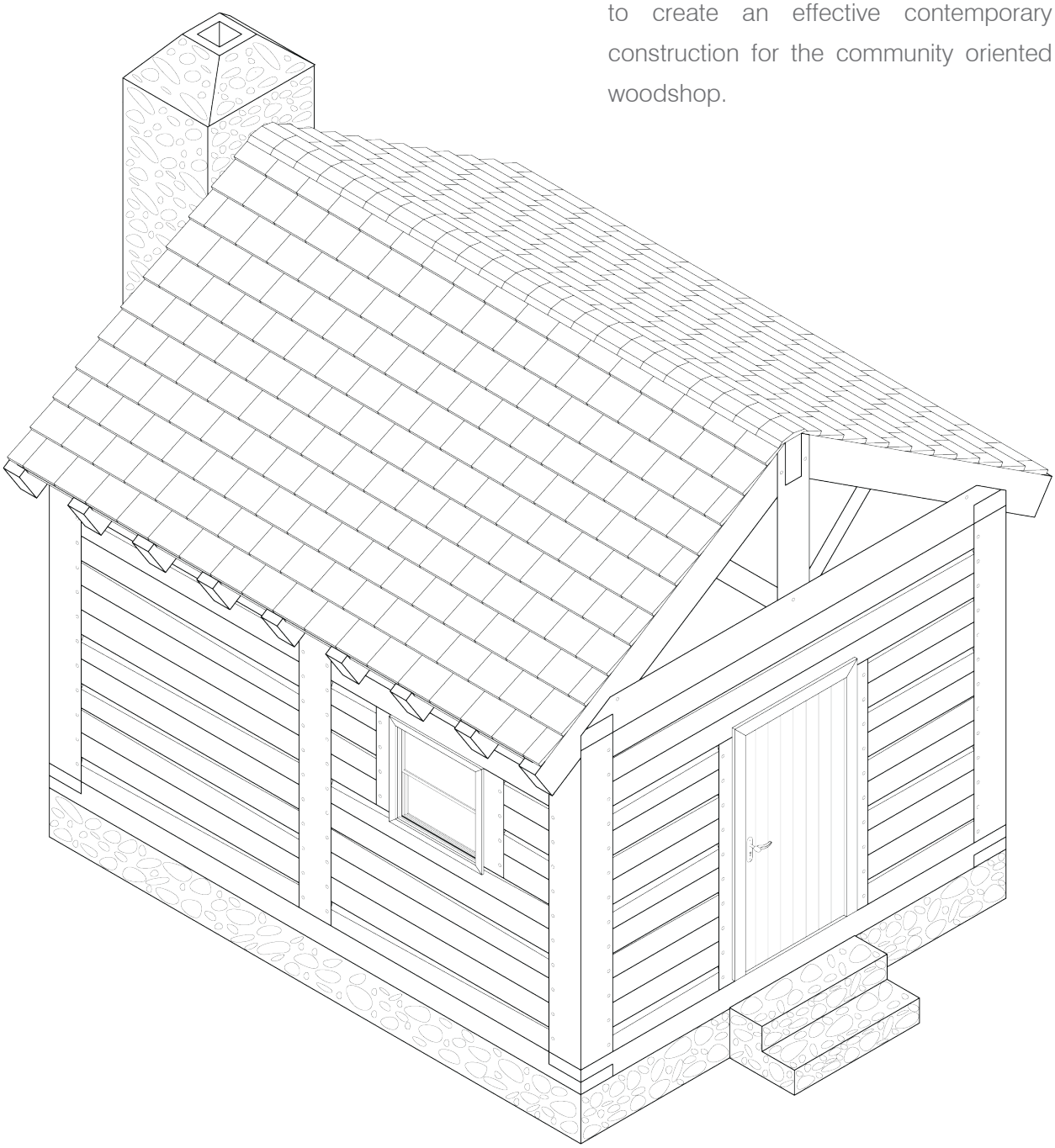

Figure 3.10

3.3

CONTEMPORARY CANADIAN TIMBER FRAMING

The European construction techniques that were carried over to Canada became more advanced and unique as people learned to adapt to the environment and break free of the ridged European ways of thinking and doing.[20] Following that, this subsection will be looking into a specific building designed by Murry Rochon, this is what you would call a contemporary Canadian timber framed barn seen in *figure 3.14*. The uniqueness comes from the freedom in the joinery to be experimental and creative as seen in *figures 3.15 and 3.16*, compared to the historic timber framing that has been done in a certain way for so long it is less likely to be able to change. The complexity in the joinery is not what you would see in an old barn but it still follows the principles of a traditional barn in regards to the structural layout. A barn was chosen as it lends itself

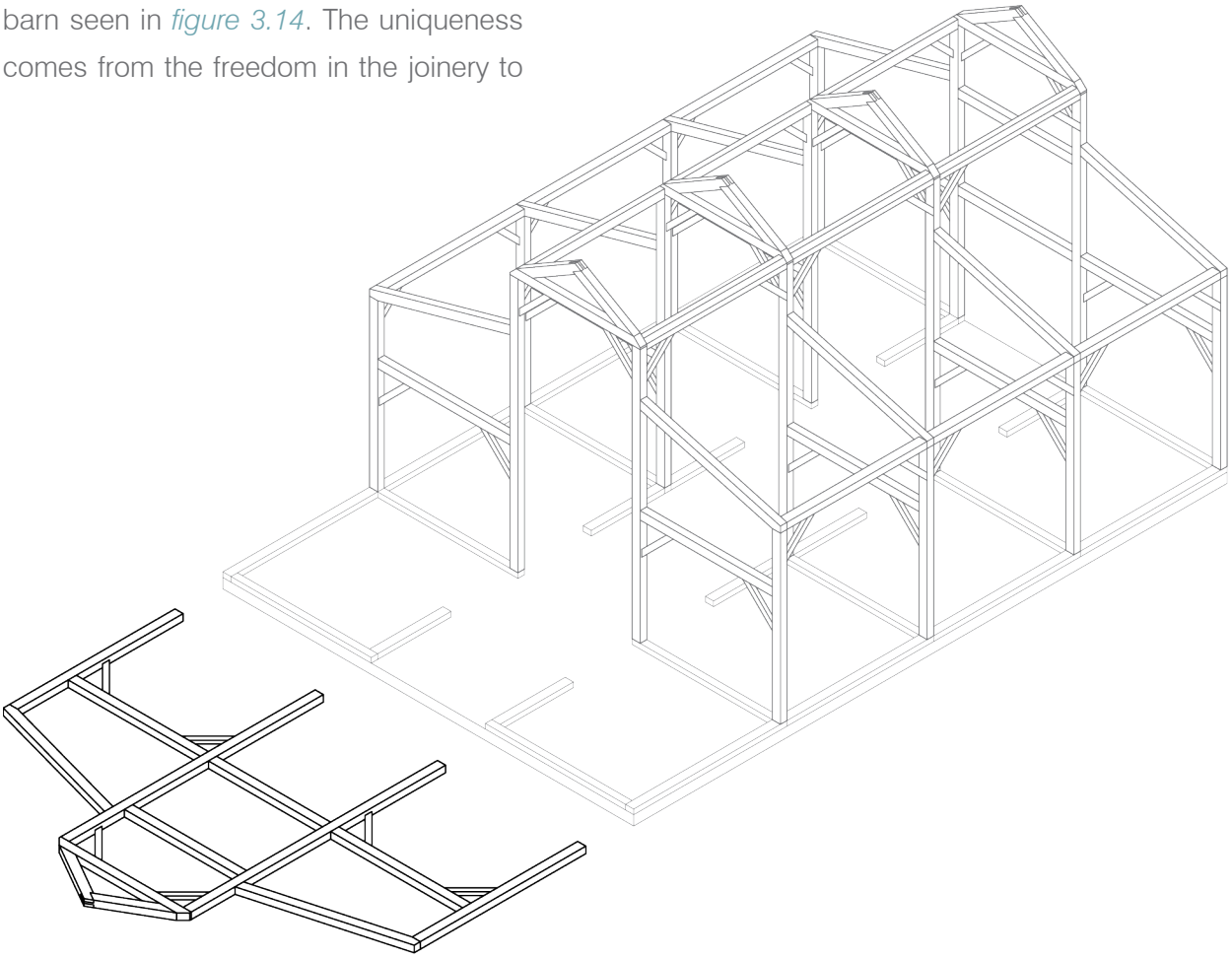

Figure 3.11

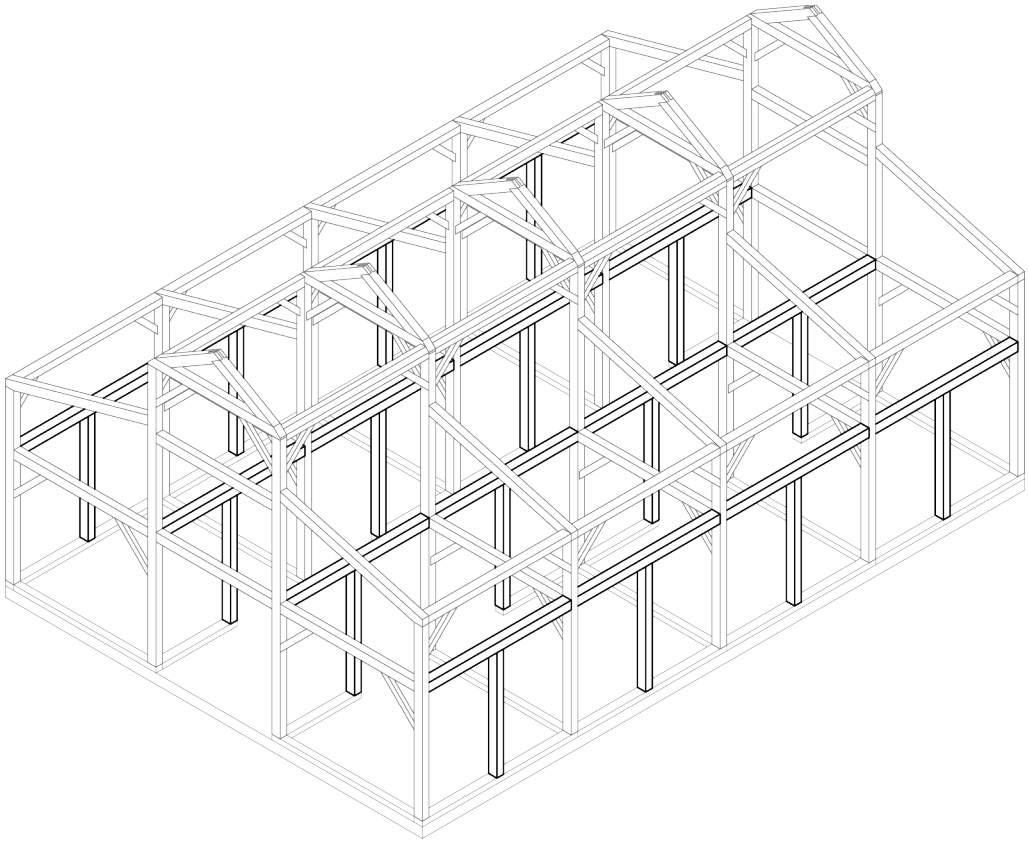

to a workshop space, with high ceilings and large open spaces which are perfect for a workshop layout.

I remodelled the building in Rhino and then created a series of isometrics seen in *figures 3.11 to 3.14*, to gain a better understanding of the construction techniques. By following this process, I was able to understand on a much more practical level how someone would go about constructing a contemporary timber framed building such as this one. This influenced and informed the design of the final project with a high degree of understanding how the joinery should be planned out regarding the process in which the building will be assembled. In *figures 3.11 and 3.12*, you can see the skeletal structure being erected and then reinforced. In *figures 3.13 and 3.14*, you can see the addition of the floor joists, dovetail cross ties and strapping introduced adding rigidity to the structure. *Figure 3.15* is a detailed analysis of the connections found on the central columns running the length of the building. The two most complex moments of wood joinery are called out in *figures 3.16 and 3.17*, to allow for a more comprehensive analysis.

Figure 3.12

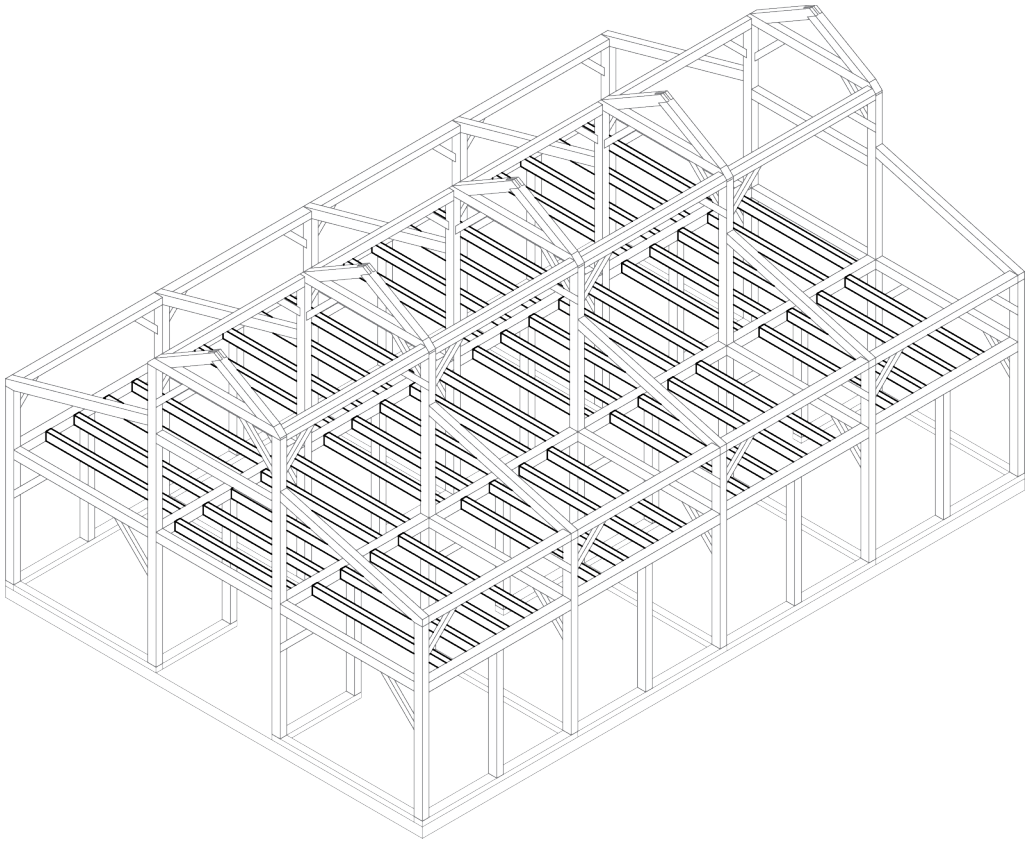

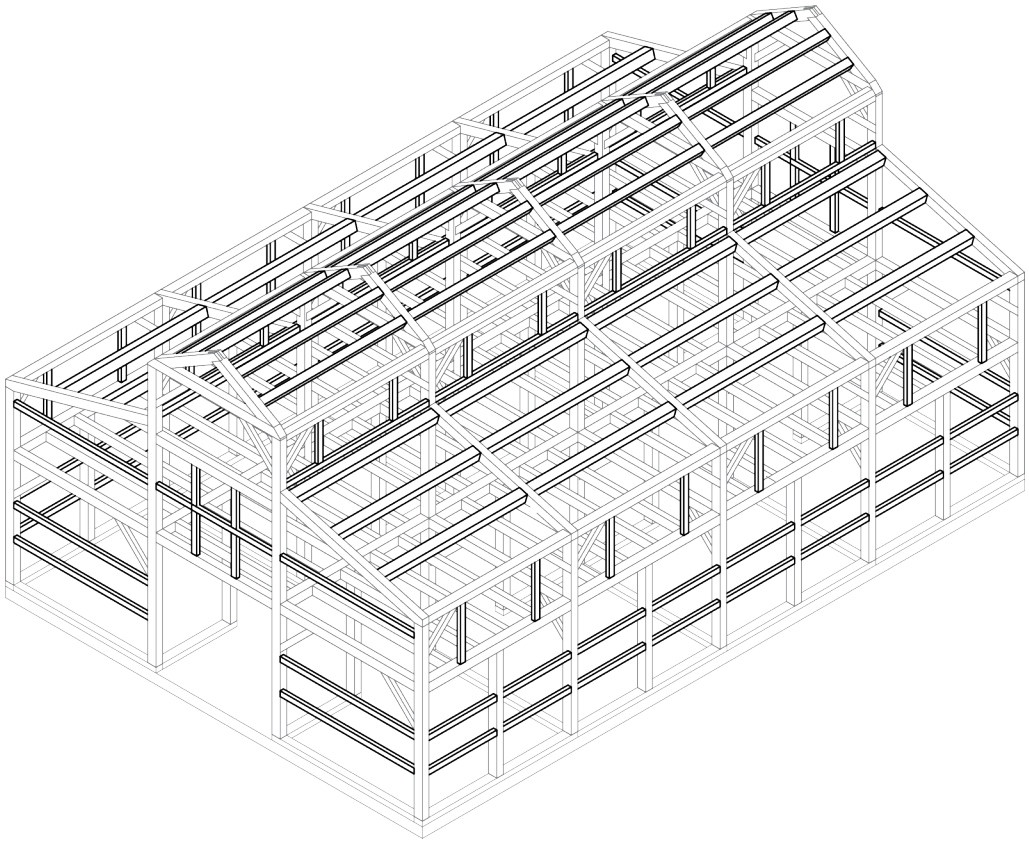

Figure 3.13 / Figure 3.14

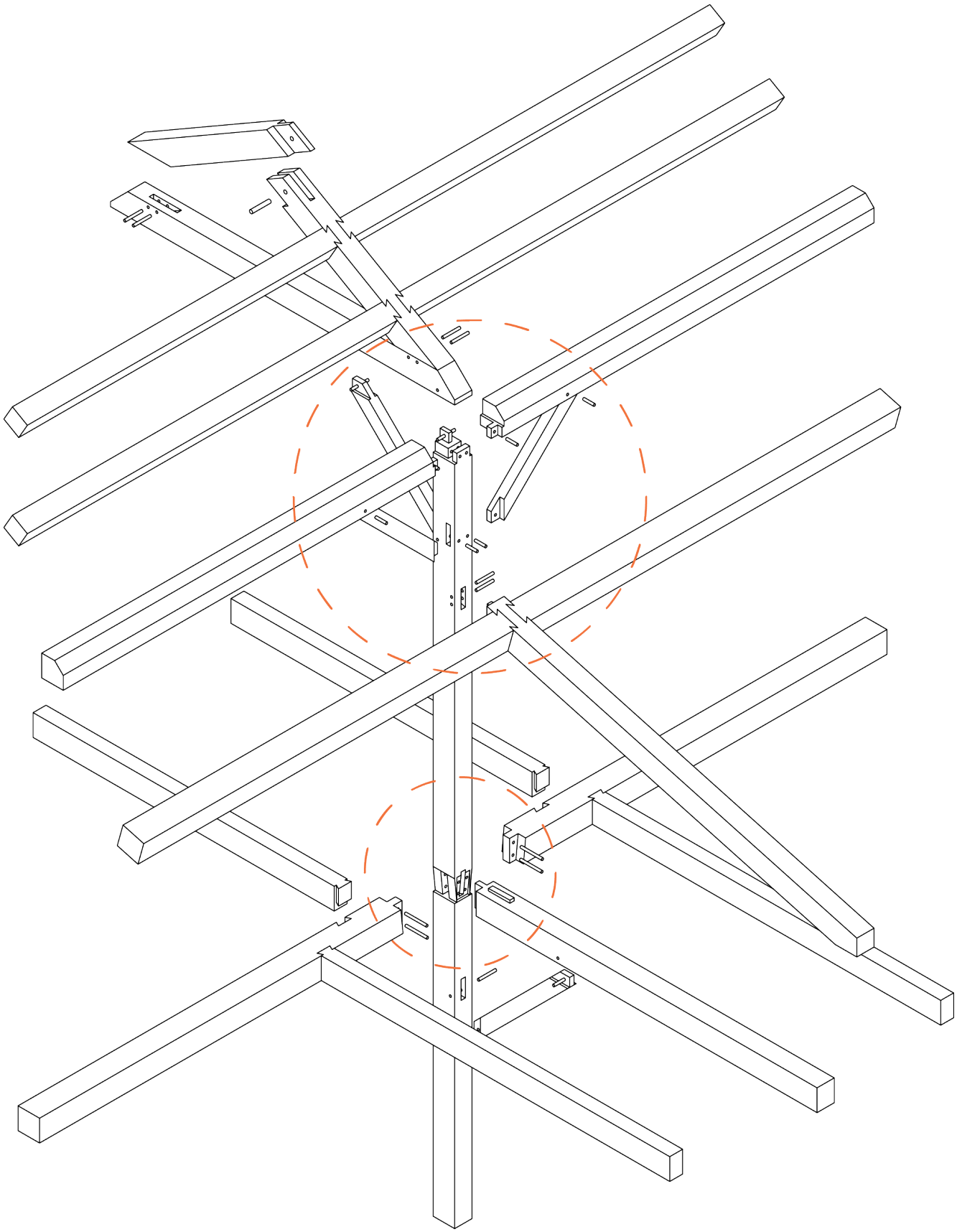

Figure 3.15

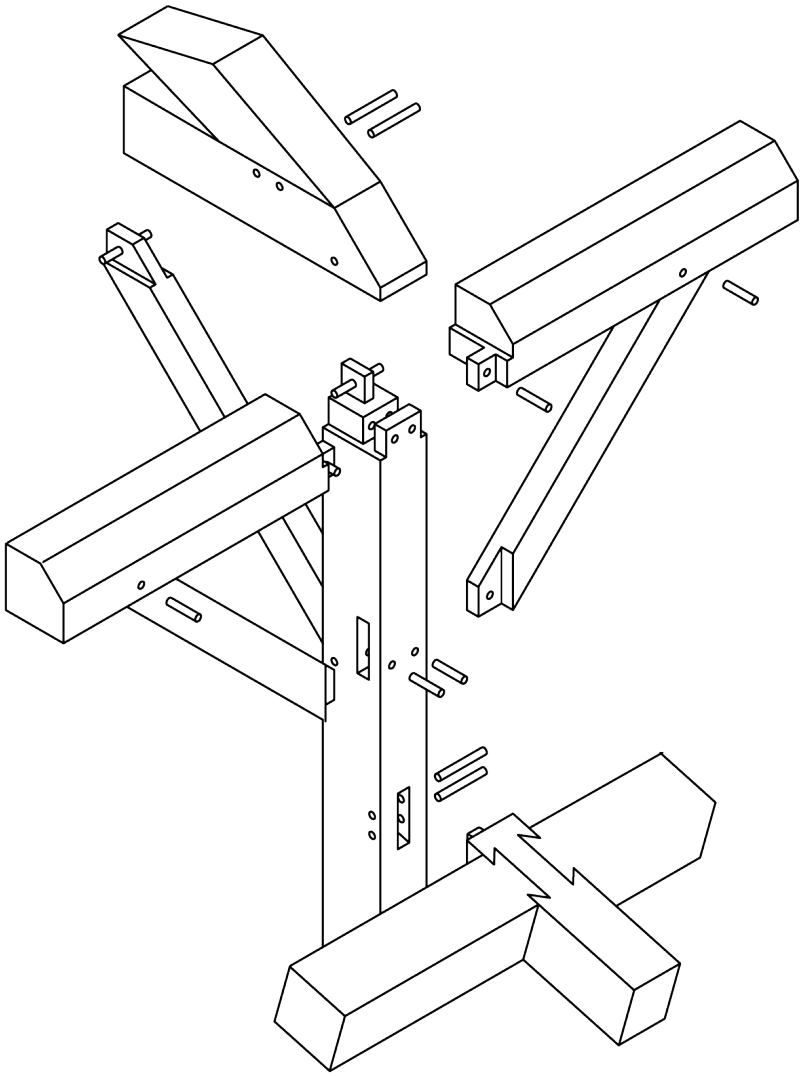

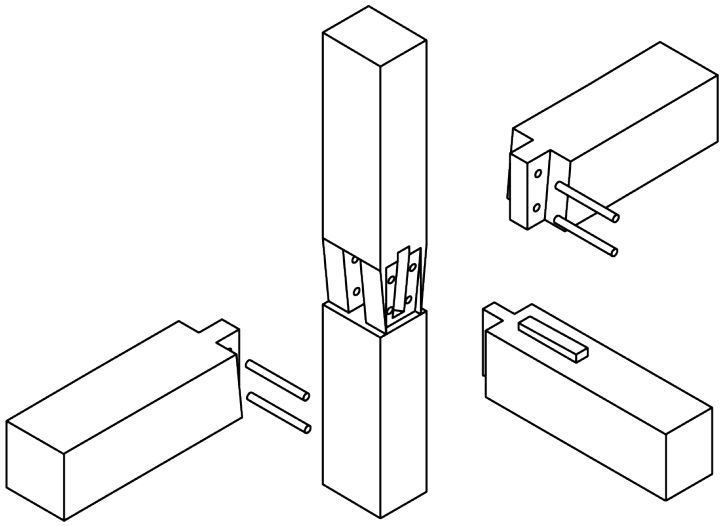

Figure 3.16 / Figure 3.17

ENDNOTES

1 Azby Brown, The Genius of Japanese Carpentry - Secrets of an Ancient Craft (Tuttle Shokai Inc, 2014). : Maurice J. Clayton, Canadian Housing in Wood: An Historical Perspective, (Ot tawa: Canada Mortgage and Housing Corporation, 1990).

2 Azby Brown, The Genius of Japanese Carpentry - Secrets of an Ancient Craft (Tuttle Shokai Inc, 2014).

3 Ibid., 58.

4 Ibid.

5 Kiyoshi Seike, Yuriko Yobuko, and Rebecca M. Davis, The Art of Japanese Joinery (Boulder: Weatherhill, 2019),91.

6 Azby Brown, The Genius of Japanese Carpentry - Secrets of an Ancient Craft (Tuttle Shokai Inc, 2014), 70.

7 Ibid.

8 Kiyoshi Seike, Yuriko Yobuko, and Rebecca M. Davis, The Art of Japanese Joinery (Boulder: Weatherhill, 2019),92.

9 Ibid.

10 Ibid., 13.

11 Ibid.

12 Ibid.

13 Ibid., 99.

14 Maurice J. Clayton, Canadian Housing in Wood: An Historical Perspective (Ottawa: Canada Mortgage and Housing Corporation, 1990), 4.

15 Ibid., 103.

16 Ibid., 69.

17 Ibid., 75.

18 Ibid.

19 Ibid.

20 Ibid., 8.

Figure 4.00

04

MAKERSPACES AND THEIR BENEFITS

In this section, making as a form of therapy will be explored and understood as a legitimate treatment method. This will be based off a case study of a rehab center that is backed up with clinical practice documentation of making as a form of therapy. Woodworking will be the specific therapeutic avenue of making in this project, allowing for an inclusive and non clinical environment. Then a review of different community workshops will provide insight into how to properly run and structure this community oriented woodshop. As well as provide valuable insight into focusing on the use of hand tools. Then existing maker culture of Sudbury is explored to help understand how to integrate it into the existing social fabric of the city.

4.1

THERAPY THROUGH MAKING

This community oriented workshop, is inspired by a case study of a rehab center called San Patrignano, based in Italy. Here they help people who suffer from addiction and help them recover through a sense of community and making as a form of therapy.[1] San Patrignano is a unique place and engages in making as a form of therapy through, weaving, hand painted wallpaper, leather-ware, carpentry, metal work and cooking; they call this form of treatment the philosophy of Bello.[2] This philosophy and treatment model is shown in *figures 4.01 and 4.02,* to help better understand the complexity of it.

At San Patrignano, they treat addiction less as a medical problem than a community problem, where an individual's lack of self-esteem and destructive tendencies can be changed by becoming members of a big family, participating in work and education for the common good.[3] In *figure 4.04*, you can see them having dinner as one large community, taking turns serving each other, building a sense of worth and belonging. Unlike other rehab models that sell what is produce, they are committed to an extremely high degree of quality in their work, see *figure 4.03*. They hold the belief that fine craftmanship is essential to building self-esteem, and that ensures not only the resident's success but the programs sustainability.[4] This drug recovery community is one of the most successful models in the world. It is partially contextually dependent in its success but there are many factors and interventions in the model that are transferable to another context.[5]

The founder had no training as a psychologist or addiction specialist when he started this center. But he had a clear idea that the best way to treat drug addiction was to make addicts feel like they were part of a community that depended on them for its well being, making them have a sense of belonging in a community and participating in work that raised self-esteem.[6] This method also provides the residents with employable skills allowing them to not get sucked back into the trap of drug abuse and crime. About 90 percent of people who are released are employed and 70 percent stay sober in a three year follow up. Which is impressive when compared to the best centers in the US that claim to only have about a 30 percent rate of recovery.[7]

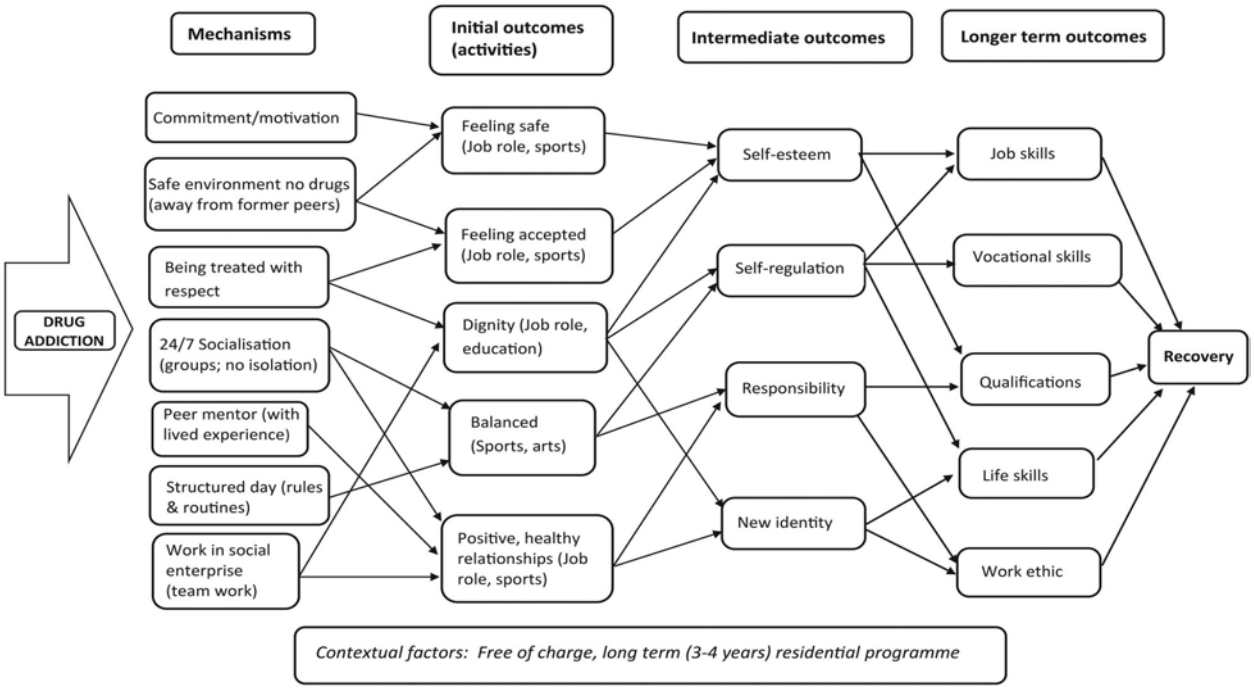

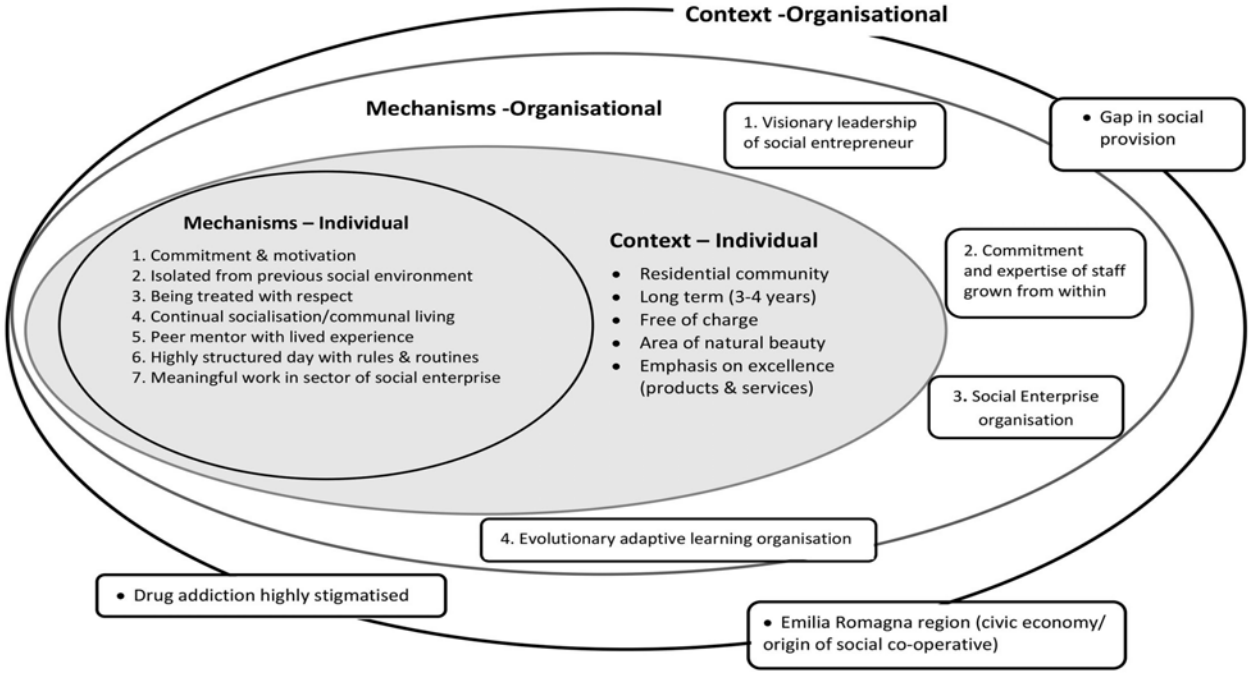

Figure 4.01 / Figure 4.02

Figure 4.03 / Figure 4.04

The Community oriented woodshop leans on this philosophy to reinforce the idea of therapy as a form of making in a more practical sense but does not mimic the rehab center in its operational model. This project is not meant to be a rehab center, but a place that can create a culture of craft in Sudbury and improve people's mental health through making and becoming part of a community like they do in San Patrignano. It will create a central hub for a maker culture in the downtown of Sudbury while also improving the makers mental well being at the same time. Forming this sense of community helps the makers create an intricate social web that they can lean on for support and create lasting bonds. This social network will also help to create connections in a business-oriented sense as the project will host maker markets where they can sell their work, reaching all of Sudbury as a potential client base.

Making as a form of therapy is not just found in San Patrignano, this philosophy is well known in the world of occupational therapy.[8] It has been commonplace in this profession since the early 1900s to utilise crafting to promote physical and mental health.[9] There have been community workshops that offer various forms of craft and have "enabled veterans who had been discharged from the hospital, but had not yet fully recovered, to restore physical and mental functions while developing skills for economic self-sufficiency"[10]. The origins of craft as therapy can even be traced back to the founding of occupational therapy in Scandinavia and other parts of the world.[11] With craft as such an integral part of occupational therapy it is easy to justify the concept of this community oriented woodshop.

4.2

ANALYTICAL INVESTIGATION OF MAKERSPACES

Looking into different sizes of workshops that were both machine focused, and hand tool focused allowing for a thorough understanding of the pros and cons of having each model. It also reinforced the scale of the project to something smaller in size, also allowing the building to be designed down to every connection. It also helped to investigate different shops to understand what I want to do for my community oriented woodshop as well as what is successful in the way the different shops were laid out.

Focusing on the Ottawa City woodshop, this is a very successful community woodshop that is in a surprisingly small venue for impact it has, see *figure 4.06*. They offer courses for people who want to learn and specific classes for making

Figure 4.05

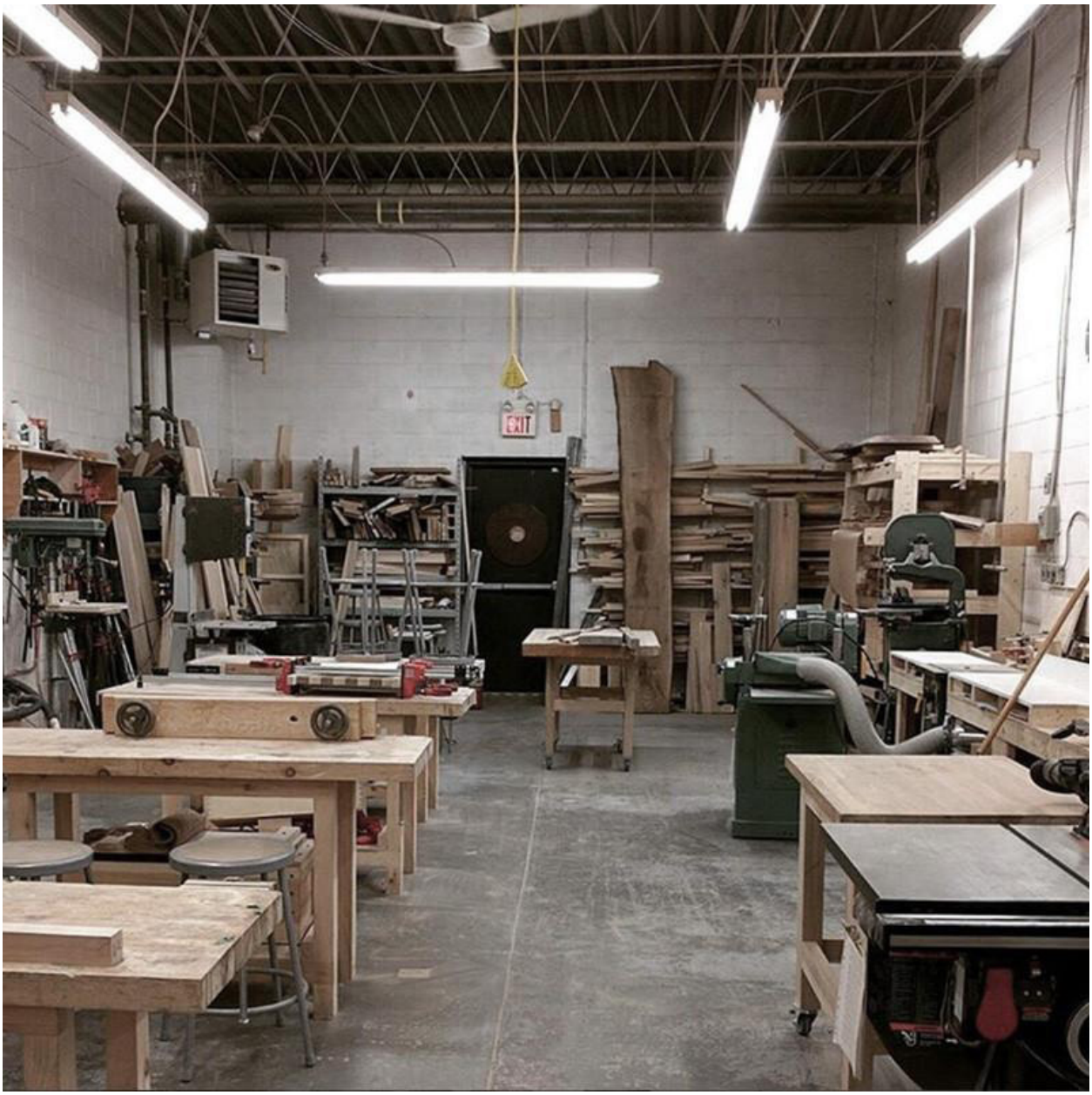

cutting boards, dining tables, steam bent toboggans and many others, *see figure 4.05*.[12] This is a good way to help introduce people who do not know what they are doing by giving them a clear direction and project to learn through and have a feeling of satisfaction at the end of it. There are staff to help guide you if you want to do your own project but there is a strong culture of the members helping each other and learning from one another.[13]

Figure 4.06

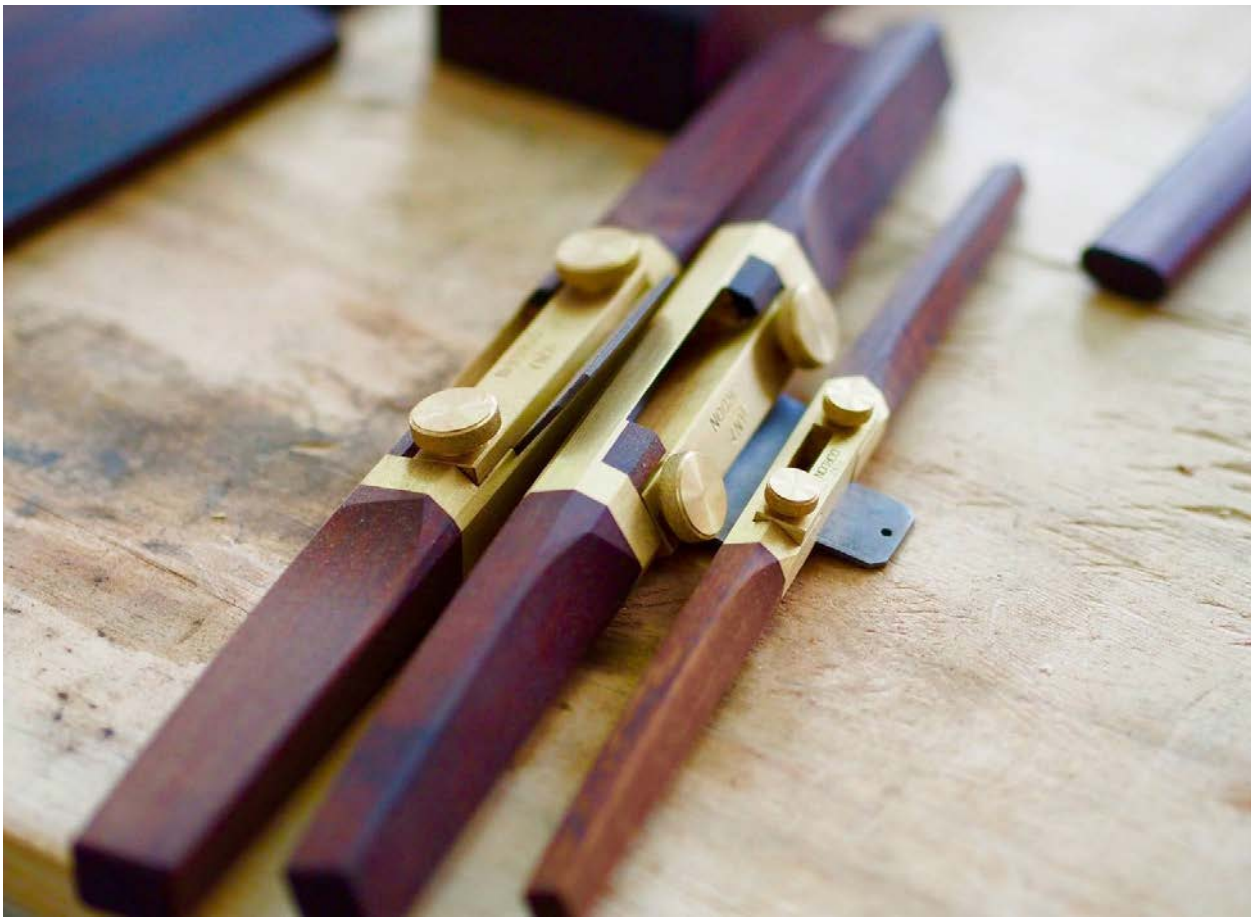

This next case study, the unplugged woodshop is a unique take on woodworking with only hand tools as they offer an experience for the user that you cannot get with power tools.[14] The use of hand tools helps people to realize that its okay for things to not go the way they expected or wanted them to, but you can always work with your mistakes and still make something beautiful. Hand tools help people slow down and learn to not worry about what is out of your control. There is a beauty in hand tools that is not just from the aesthetic of them but is derived from the immense design that went into them, making your hand to just want to hold them, see *figure 4.07*. This is not a community woodshop as it is more structured for classes but the focus on hand tools provides a good basis to draw off for my community oriented woodshop. The space is quite small but that forces social interaction of people when working in it, creating a social fabric for the makers, see *figure 4.08*.

Figure 4.07

Looking at these two different approaches there is something useful that can be appropriated from each. The way the Ottawa City woodshop is structure in its mix of classes and just freely working has been an extremely successful model that this project will be adopting. As for the unplugged woodshop, its focus of strictly hand tools is what this project will be taking from it. By strictly using hand tools it helps focus the direction of the community oriented woodshop towards a therapeutic model, where it has a calmer and more relaxing atmosphere without all the noisy machinery that is in a regular shop.

Now focusing specifically on the existing or lack there of a maker culture in Sudbury. To be fair, there are a handful of existing maker spaces or something akin to them in Sudbury already, but they are not connected or coordinated with each other. There is not anything that connects this decentralized culture of making as it is scattered across the city, creating an opening for what this thesis aims to do. The proposed community oriented woodshop will host maker space markets frequently and bring this scattered community together, creating a centralized hub for this community to thrive.

Figure 4.08

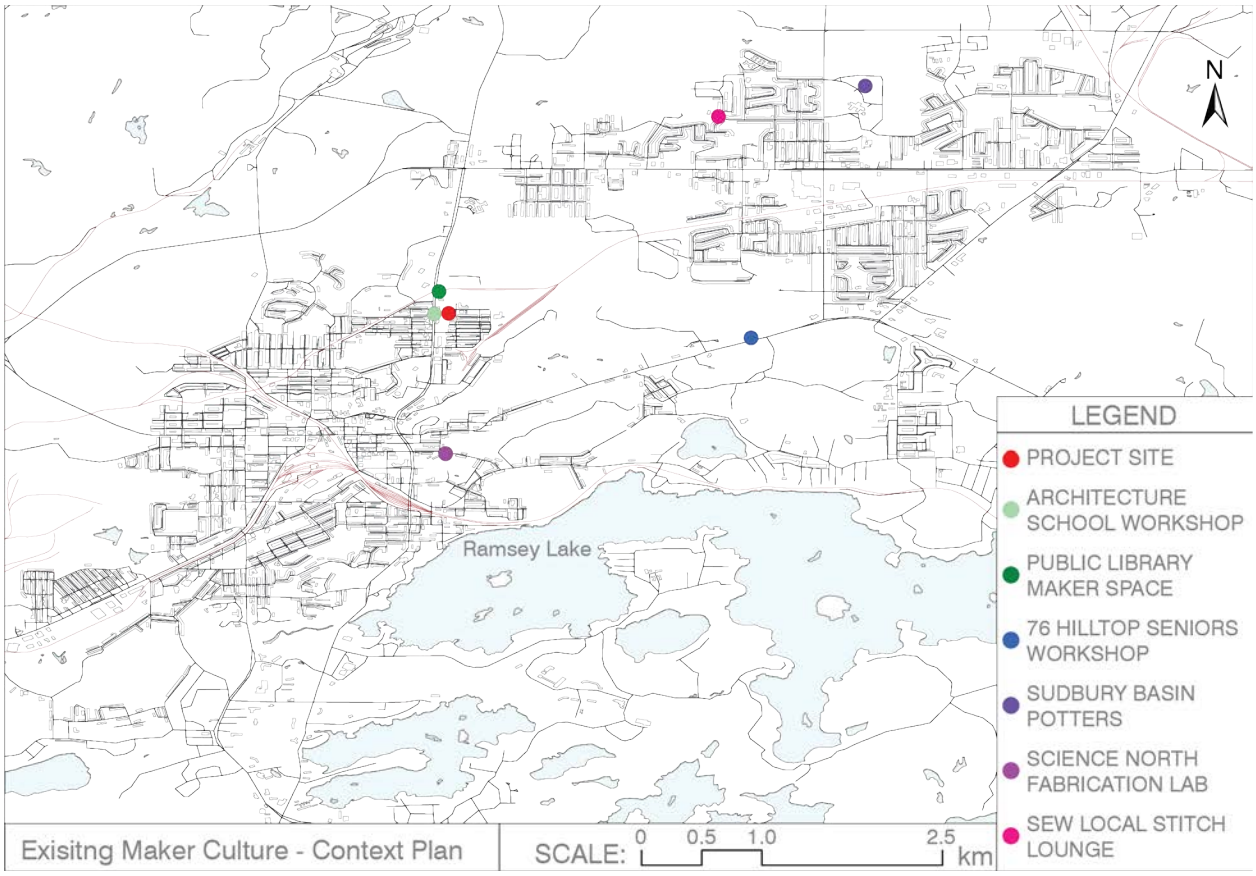

In *figure 4.09*, you can see the distribution of tis existing maker culture in Sudbury and where the intended location of the proposed project is going to be. At this scale it is being located somewhat in the center of the existing maker spaces to help improve the connectivity between them. There is an existing community workshop for seniors just north of Rasmey lake, highlighted in blue in *figure 4.09*, It is too small and out of the way to be retrofitted for what I want to achieve with my community oriented woodshop but is the closest thing in Sudbury to it, allowing for possible collaboration.

From speculative analysis I've noticed a decentralized community of making in Sudbury where a portion of homeowners have a workshop of some kind in their garage, ranging from a few tools to a proper set up. Most people have someone they know with a workshop setup that they can go over to their house and use but I want to create a centralized hub to bring everyone together.

Figure 4.09

ENDNOTES

1 Alison M. Devlin, and Daniel Wight, “Mechanisms and Context in the San Patrignano Drug Recovery Community, Italy: A Qualitative Study to Inform Transfer to Scotland,” (Drugs: Education, Prevention and Policy 28:1 (n.d.): 85–96.

2 “The Healing Power of ‘Bello’ - San Patrignano Drug Rehabilitation in Italy,” The Craftsmanship Initiative, October 23, 2021. https://craftsmanship.net/the-healing-power-of-bello/.

3 Ibid.

4 Ibid.

5 Ibid.

6 Ibid.

7 Ibid.

8 Fortuna, “The Art and Process of Wood Carving as a Meaningful Occupation,” The Open Journal of Occupational Therapy 7, no. 2 (n.d.), https://doi.org/10.15453/2168-6408.1616. : Sissel Horghagen, “The Use of Craft Activities as an Occupational Therapy Treatment Modality in Norway during 1952–1960,” (Occupational Therapy International 14, 2007): 42–56. https://doi.org/10.1002/oti.222.

9 Jennifer Fortuna, “The Art and Process of Wood Carving as a Meaningful Occupation,” The Open Journal of Occupational Therapy 7, no. 2 (n.d.), https://doi.org/10.15453/2168-6408.1616, 2.

10 Ibid., 3.

11 Sissel Horghagen, “The Use of Craft Activities as an Occupational Therapy Treatment Modality in Norway during 1952–1960,” (Occupational Therapy International 14, 2007), https://doi.org/10.1002/oti.222, 43.

12 “Woodshop in Downtown Ottawa Offering Memberships and Education,” Ottawa City Woodshop. Accessed December 23, 2021. https://ottawacitywoodshop.com/.

13 Ibid.

14 “Home,” The Unplugged Woodshop, September 19, 2021. https://www.theunpluggedwoodshop.com/.

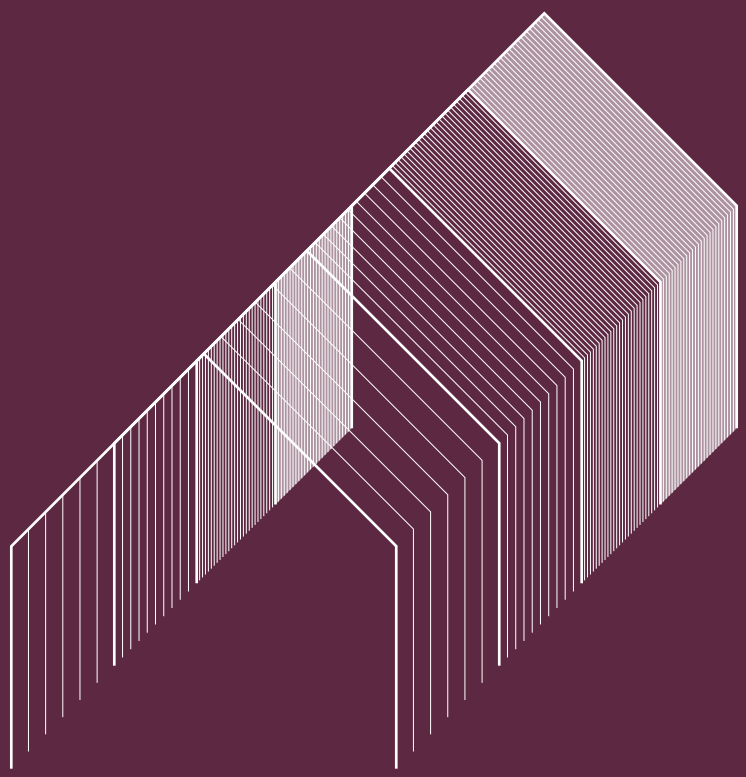

Figure 5.00

05

DESIGNING A COMMUNITY ORIENTED WOODSHOP IN SUDBURY

This section will start off with the architectural precedents that informed and inspired the final design and then explain the driving architectural concepts behind the project. Then it will dive into the thorough analysis and selection of the site for the woodshop. This chapter will walk through the strategic placement in the downtown, relative to the school of architecture as well as the services for mental health. A focus will be on exploring how the program will work with the city of Sudbury and how it will create a culture of making, fostering a community that relies on each other, creating individual self worth in the process. The design is then looked at more thoroughly, brining attention to the specific architectural interventions that make this project so unique.

5.1

CONCEPTUAL DEVELOPMENT

The community oriented woodshop is primarily informed and inspired by the workbench. Additionally, the conceptual development of the architecture is more refined and complex than just that. Drawing on the previous architectural research and the precedents in this subsection, to inform how the project creates a sense of craft. This parti diagram as seen in *figure 5.01,* represents stripping back the building assembly and brining attention to the tectonics. With the design of the woodshop, the building appears to be stripped apart layer by layer as it is represented in this parti. It celebrates the structure through highlighting the moments where there are complex connections. In doing so, a sense of craft is achieved through the utilization of workmanship of risk. The highlighting of the structure and the connections is another driving architectural concept that informed the design of the building, creating a didactic language throughout to allow the makers to learn from it.

The design of the community oriented woodshop draws on precedents that are successful in the combination of different typologies and construction styles into a contemporary building. There are two buildings that were the most influential as architectural precedents not previously covered in the thesis and they are the cow shed designed by localarchitecture, located in Switzerland and Eco-Sustainable House designed by Djuric Tardio Architectes located in France.[1] In particular, these two buildings informed the conceptual development of design over other buildings that were previously analysed.

With the cow shed project, the architects took local construction typologies of barns and beautifully combined them into one contemporary building that utilised the advantages found in both typologies, see *figures 5.02-5.04*.[2] This building informed my understanding of how to work with different typologies and construction styles in combining them together into a contemporary design.[3] This was critical to the development of the woodshop as I am attempting to bring together multiple influences of timber construction and connections into a contemporary building. The detailing of the connections is also done well, in *figure 5.04*, there is a wood joint connecting two structural members.

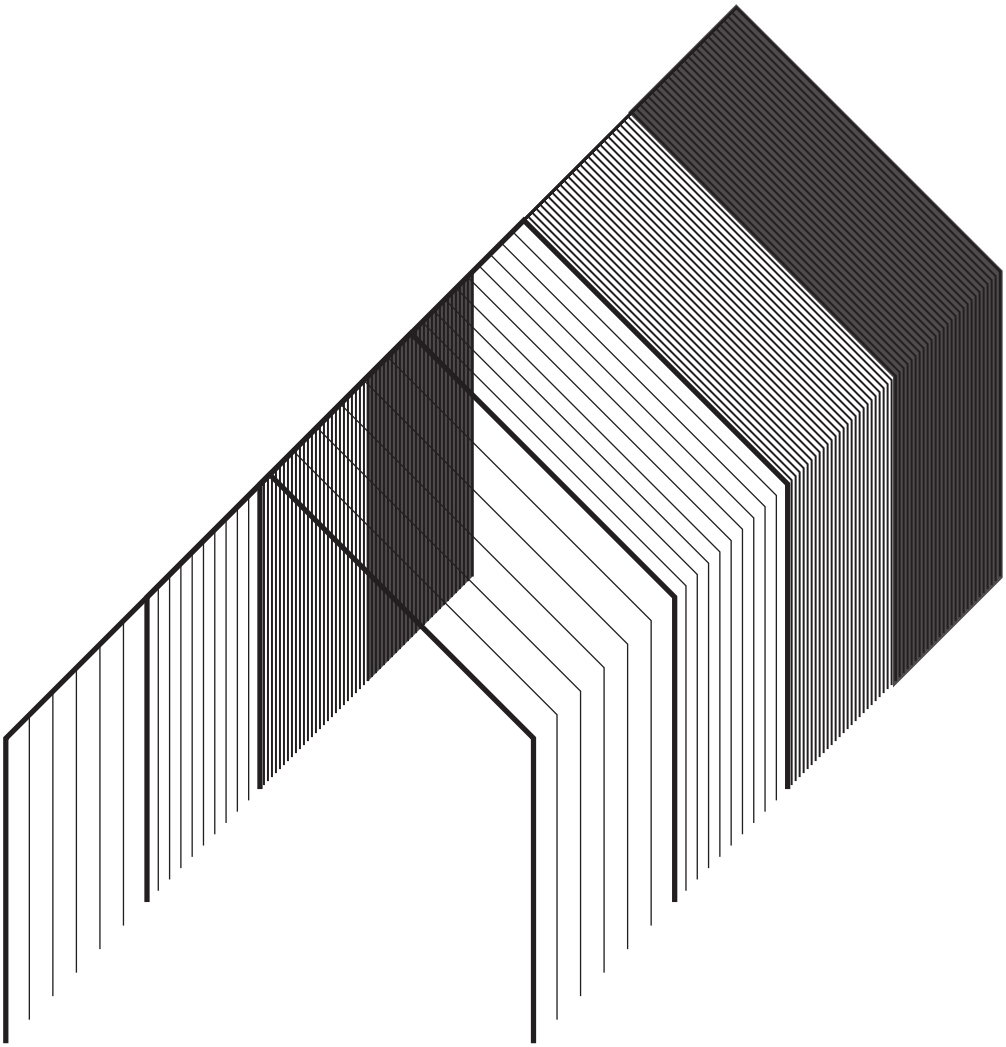

The Eco-Sustainable House project is another example of a blending of styles by combining a traditional roof pitch of a residential house with a modern design, see *figures 5.05 and 5.06*.[4] This deconstruction of the traditional roof pitch inspired my design to create a similar architectural gesture that highlighted the structural connections in the roof where it was stripped back. I also was informed by the way the architects took care in the detailing of the facade where the mitre joint of the siding has an expansion gap to account for the natural motion in the material, see *figure 5.07*.[5] This degree of attention to detail is carried over to the design of the woodshop in the connections and the assembly process of the structure.

Figure 5.01

Figure 5.02 / Figure 5.03 / Figure 5.04

Figure 5.05 / Figure 5.06 / Figure 5.07

5.2
SITE ANALYSIS & DESIGN

This will be a place whereas a member, you can learn about craftsmanship through the didactic architecture and furniture as well as the people who run the building. The site is in the downtown of Sudbury because of its proximity to the other resources that are offered to people who struggle with mental heath and addictions. The placement of the building is of importance to allow for people to access it through public transit, further reinforcing the downtown as the right location for it. The work produced will sell at the local market downtown to help support the program and the maker as a means of income, as well as give a sense of accomplishment and fulfillment through quality work.[6]

Beginning with the site selection, this process was rather straight forward. The downtown was chosen as the optimal site based off the larger analysis of the existing maker culture, revealing it as the best location to create a centralized hub. The next step was to figure out were in downtown. This process started with the identifying the existing mental health services found in the downtown area, they are highlighted in blue in *figure 5.08*. These services range from psychologists to crisis centers. This is important to have these services near the community oriented woodshop as the program will not operate as a clinical model but as a space where anyone can benefit from the positive mental health effects from making as a form of therapy, solidifying its need to be near these services.

There is an opportunity with the proximity of the Architecture school to the proposed site, see *figure 5.08*. The community oriented woodshop will be able to have the students become part of the maker culture, being the bridge between the city and the school's maker cultures, creating a larger centralized hub of craft and culture. The work produced will sell at the local farmers markets downtown as well as at its very own market to help support the building and the makers as a means of income.

Now analysing the site in terms of its accessibility, this would be a great site to create a centralized hub for the maker culture as the transit terminal is close, along with various bus stops, see *figure 5.09*. Allowing it to be easily accessible through public transit makes it a more

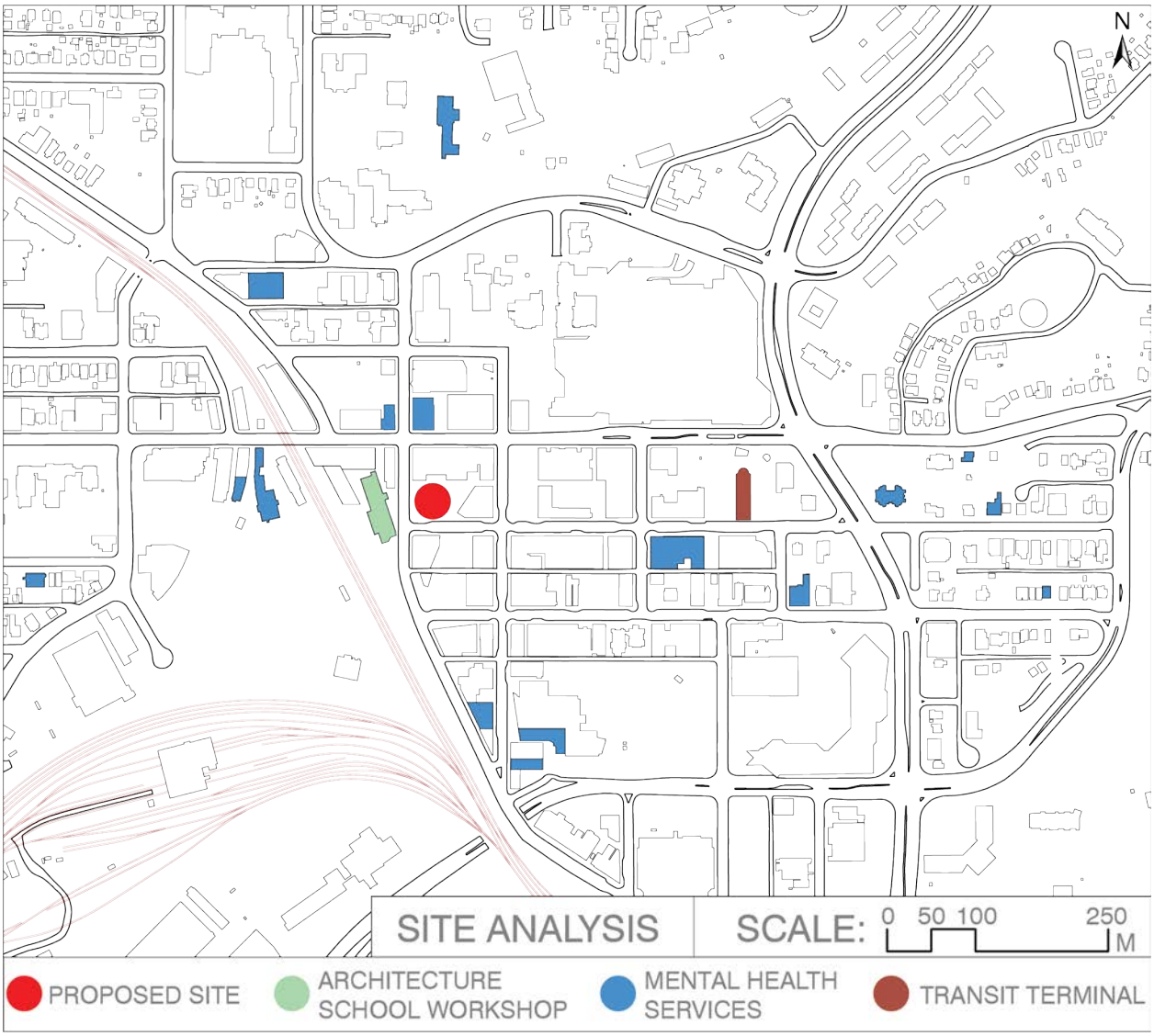

successful community building. When the maker markets are hosted and the parking lot on the site is turned into an exterior market space there are still many options for people to go to for city parking that are all within a five-minute walk to the project site, see *figure 5.09*.

The roof plan shows how the site works with the immediate context and the flow of traffic, see *figure 5.10*. There is a corridor owned by CPR, making it impossible to build a building in it. Using this to my advantage, I am leaving it as an access road for loading as well as another means of access for the venders when the maker markets are hosted and take over the parking lot.

Figure 5.08

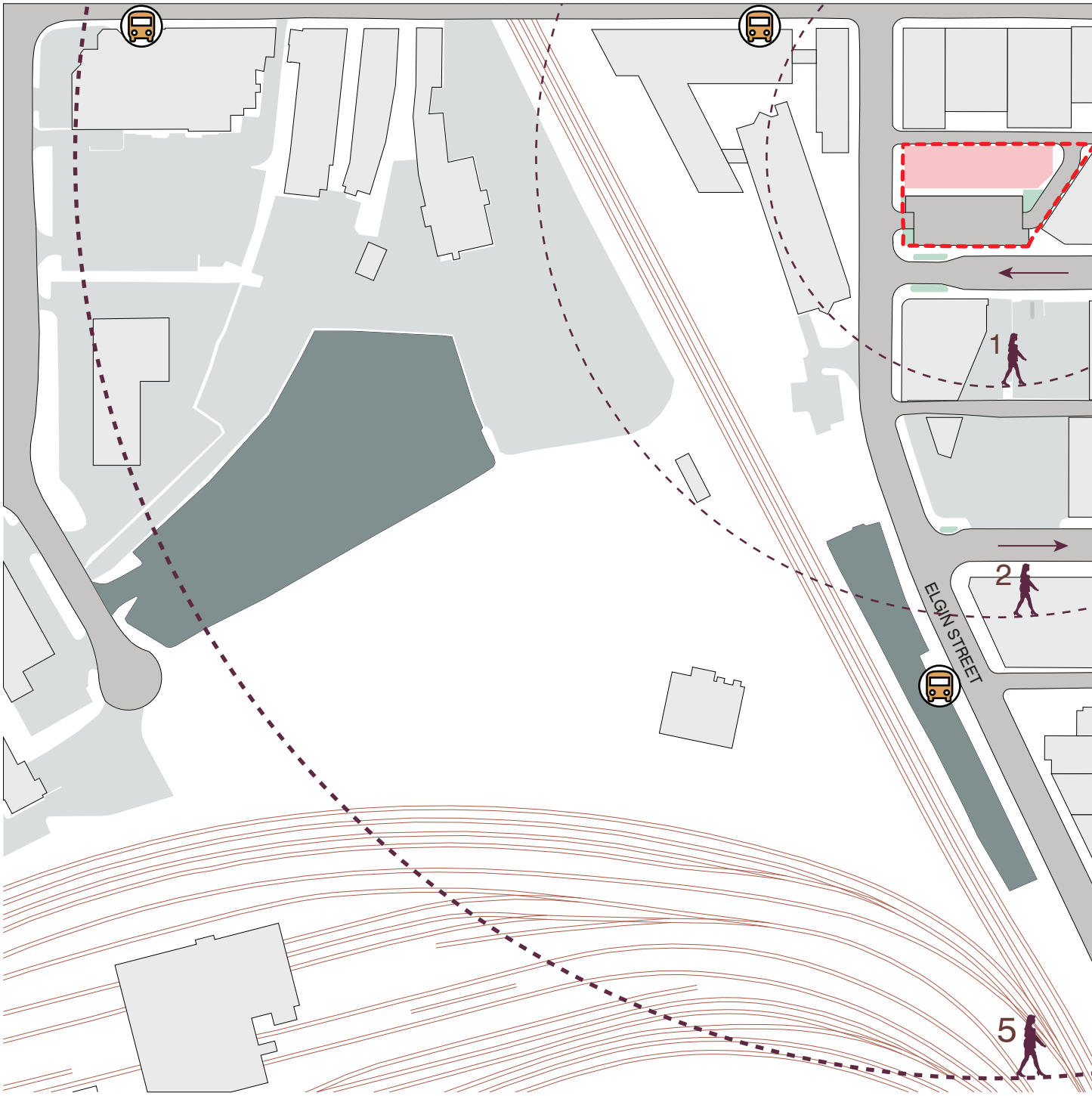
1
2
ELGIN STREET
5

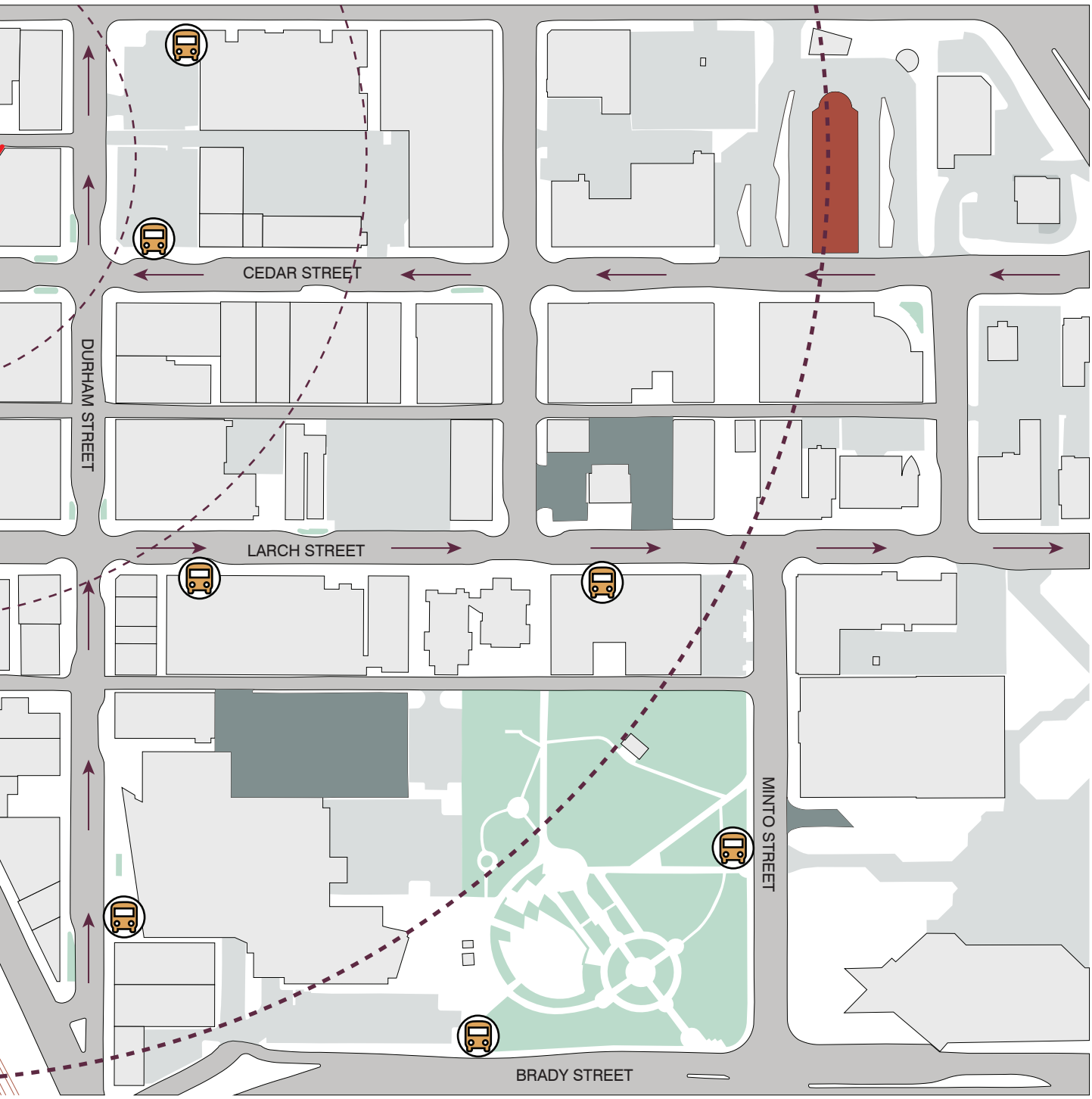

BUILDING OUTLINE

PROPERTY LINE

SCALE: 0 25 50 100 m

WALING DISTANCE

PAID / FREE PARKING

TRANSIT TERMINAL

BUS STOP

SITE ANALYSIS - ACCESSIBILITY

Figure 5.09

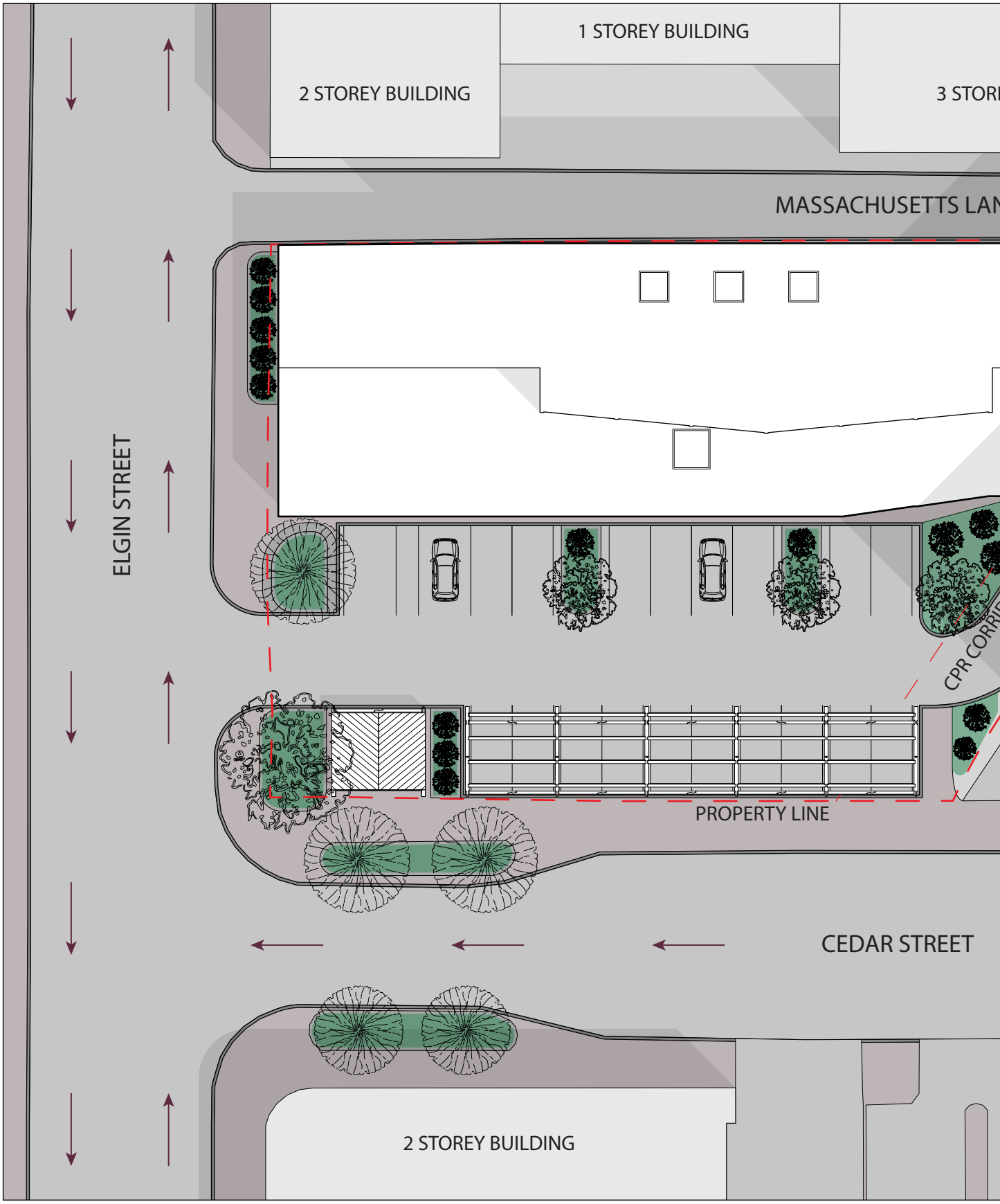
1 STOREY BUILDING
2 STOREY BUILDING
3 STORE
MASSACHUSETTS LAN
ELGIN STREET
CPR CORRID
PROPERTY LINE
CEDAR STREET
2 STOREY BUILDING


EY BUILDING
2 STOREY BUILDING
NE
N
DURHAM STREET
7 STOREY BUILDING
DOR
3 STOREY BUILDING
ROOF PLAN
SCALE:
0
5
10
25
m

Figure 5.10

Focusing on the programmatic layout and spatial relationships of the building, it is broken up into 3 kinds of spaces, one as the workshop, the other only as access for the makers and people who run the building and lastly as public access, see *figure 5.11*. The spatial relationships between the three are divided between the public and the makers. The workshop and the amenities for the makers are intertwined towards the back of the building where they have a separate entrance. This physical separation between the public areas of the building and the private/maker spaces is clearer in the programmatic plans, see *figures 5.12 - 5.13*.

Focusing on the relationships of the spaces with each other and with the site, there is a clear rational to the layout of the building and the site design, see *figures 5.12 & 5.13*. The public access of the building is along the main street, of the site, drawing people into the smaller permanent interior Market/Lobby. At the southwest corner, there is a covered open air structure turned towards the public street where off cuts will be available as

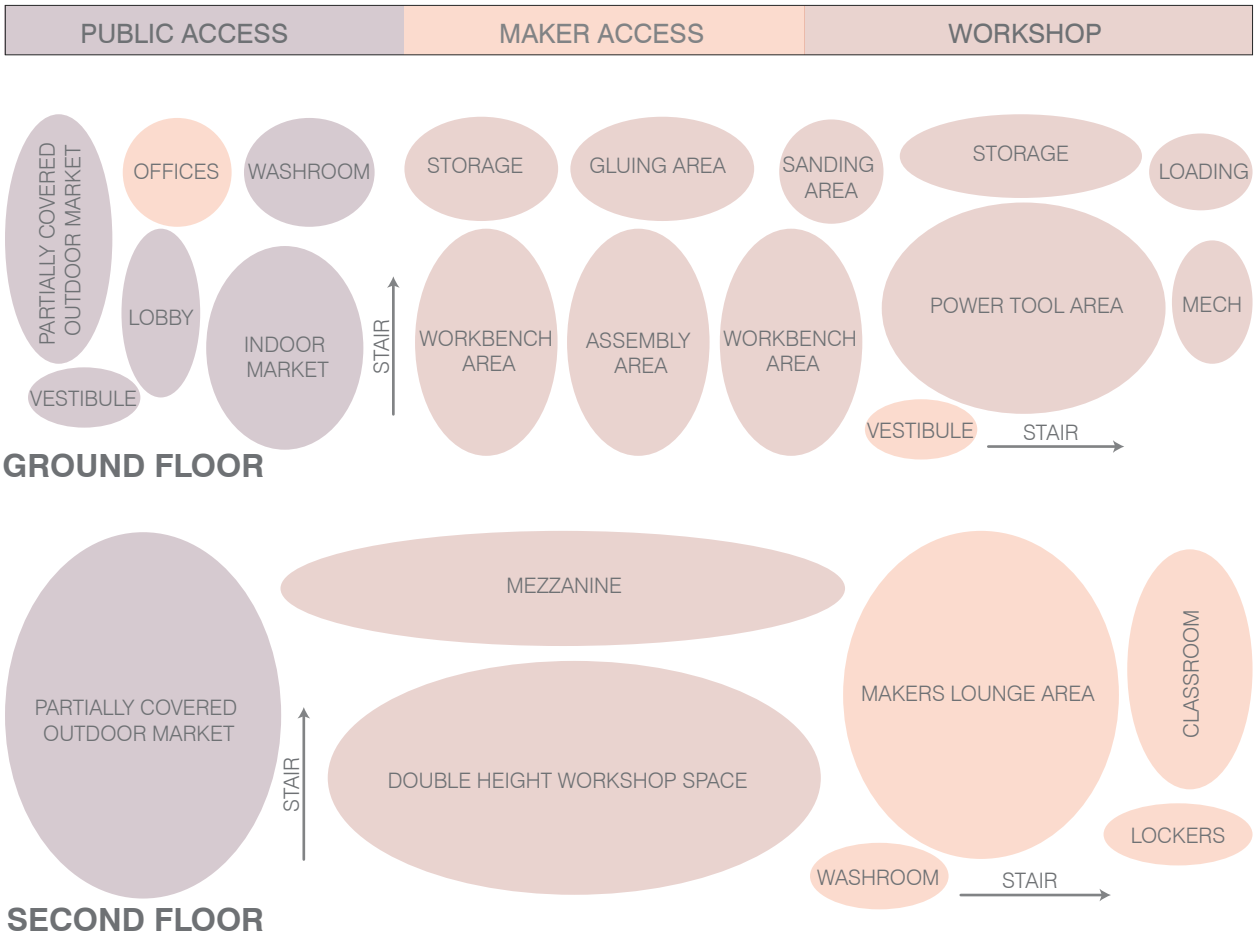

Figure 5.11

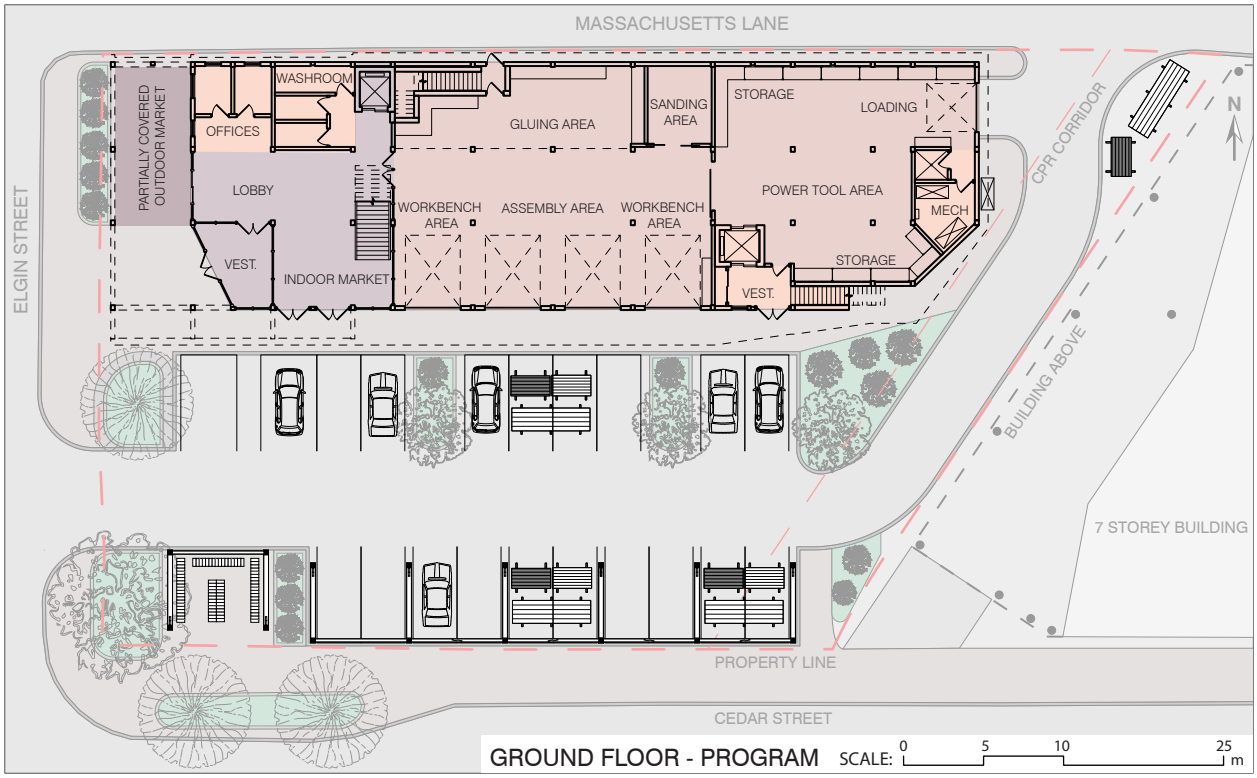

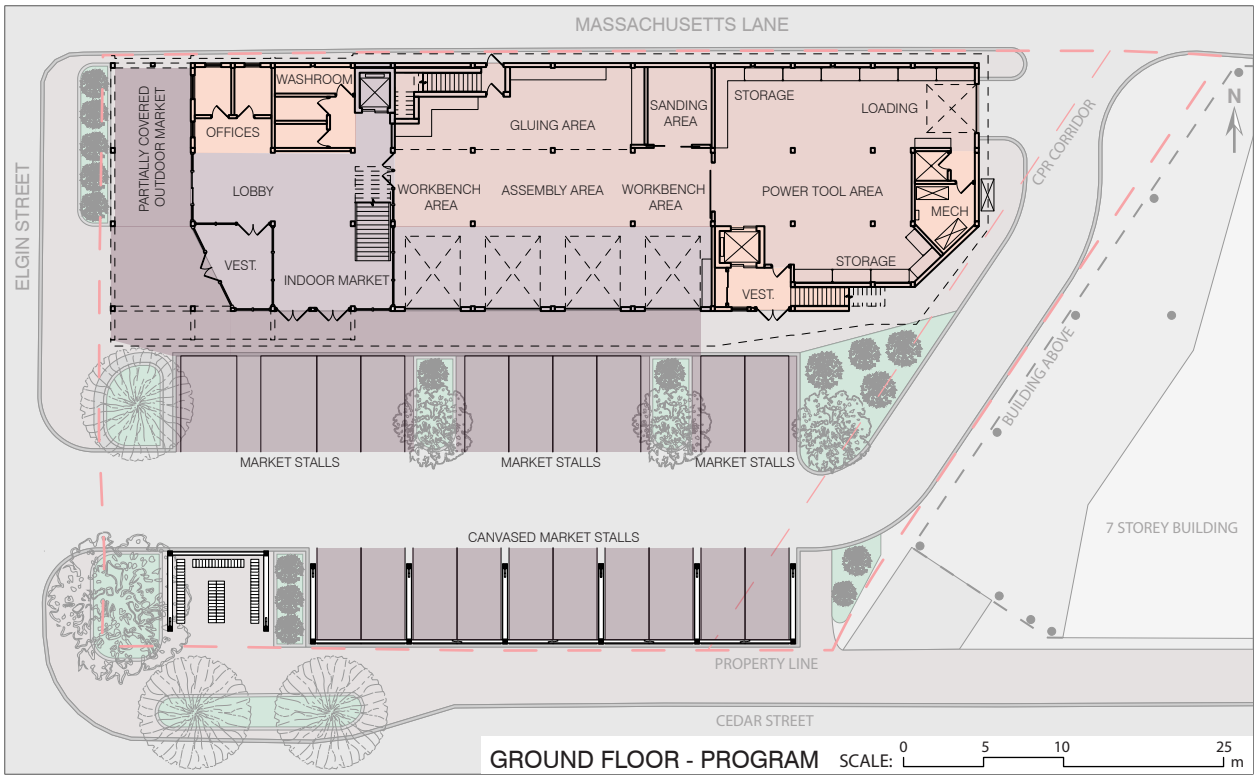

Figure 5.12 / Figure 5.13

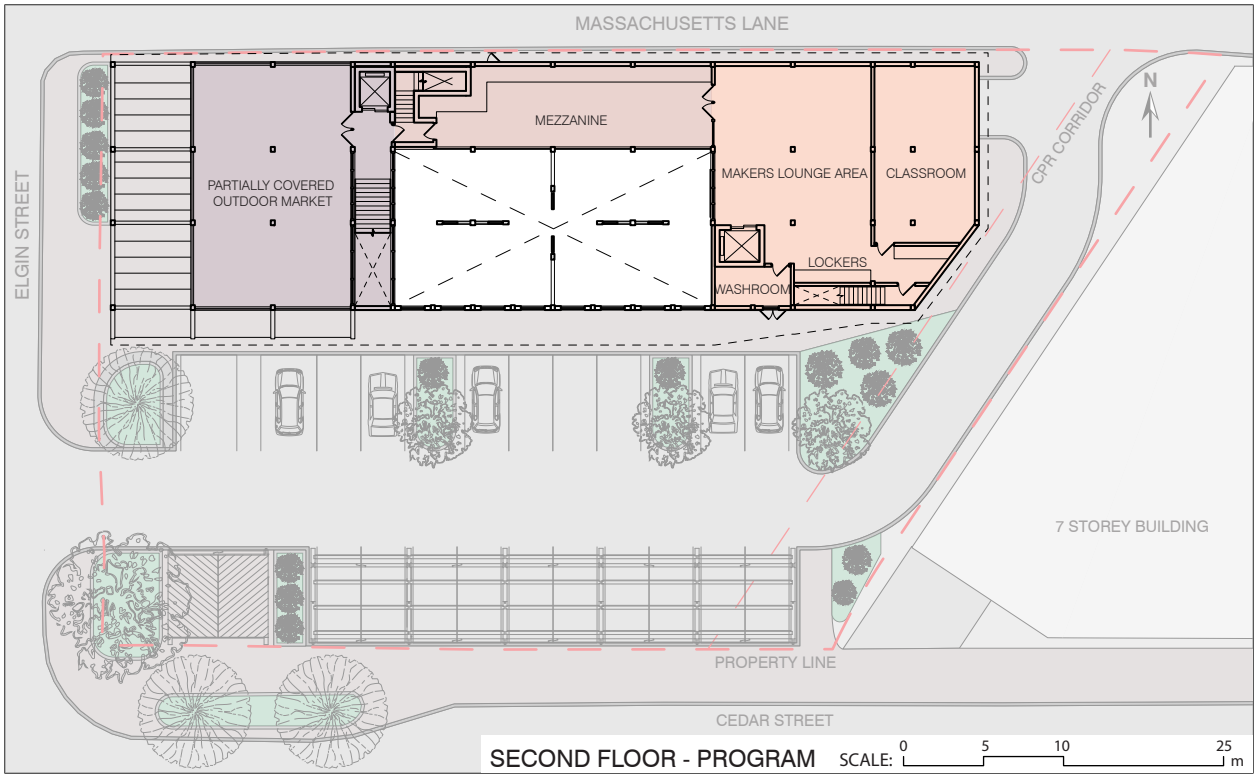

free firewood for the community. When the larger maker market is not being hosted on the weekends, the parking lot will be used as normal along with the drying and storing of lumber that can be placed in one of the open air structures along the south of the site before it is brought into the building.

When the larger maker markets are hosted, the entire site comes alive. The facade along the southwest corner of the building opens its doors, blurring the interior with the exterior. The Garage doors to the woodshop will open, allowing the market to bleed into the building, see *figure 5.13*. This is where some of the makers can host consultations for to custom pieces to be ordered. The structures along the south of the site can have canvas applied to them to create a shaded market stall, utilizing the parking lot to its full potential.

The second floor has an open air, partially covered market space that will function regardless of whether the entire site has been transformed into a market that day, see *figure 5.14*. The Mezzanine in the woodshop Is separated by the fire exit beside the elevator. The east side of the building is for the makers, giving them a space to congregate, building friendships and forming a community.

Figure 5.14

5.3

THE INTIMACY OF INTRICACY

In this next subsection, the design will be covered in detail with a focus on the moments of craft exemplified throughout the project at varying scales. Utilizing the workmanship of risk to unlock the full potential of wood as well as moments where the influence of the workbench sine through in the design. Starting off with a detailed look into one of the parking/ market stalls located along the south side of the site.

These parking/market stall structures are a celebration of the workmanship of risk, see *figure 5.15*. The structures are to be made purely with friction fitted and locking joinery. They are to be spliced together and be an amalgamation of different pieces, serving as didactic in the joinery but also highlighting the reality of wood as a building material. They are to be made

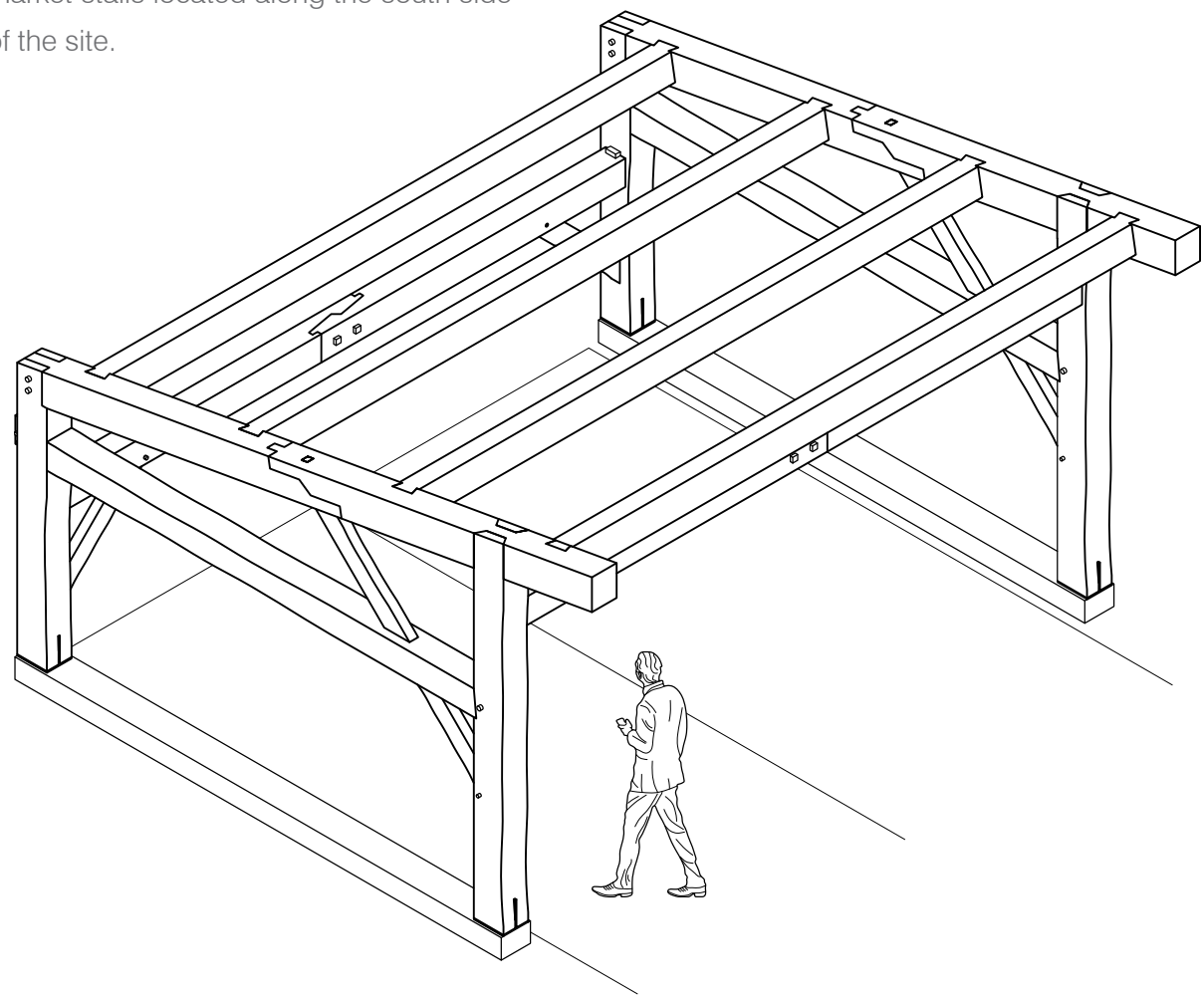

Figure 5.15

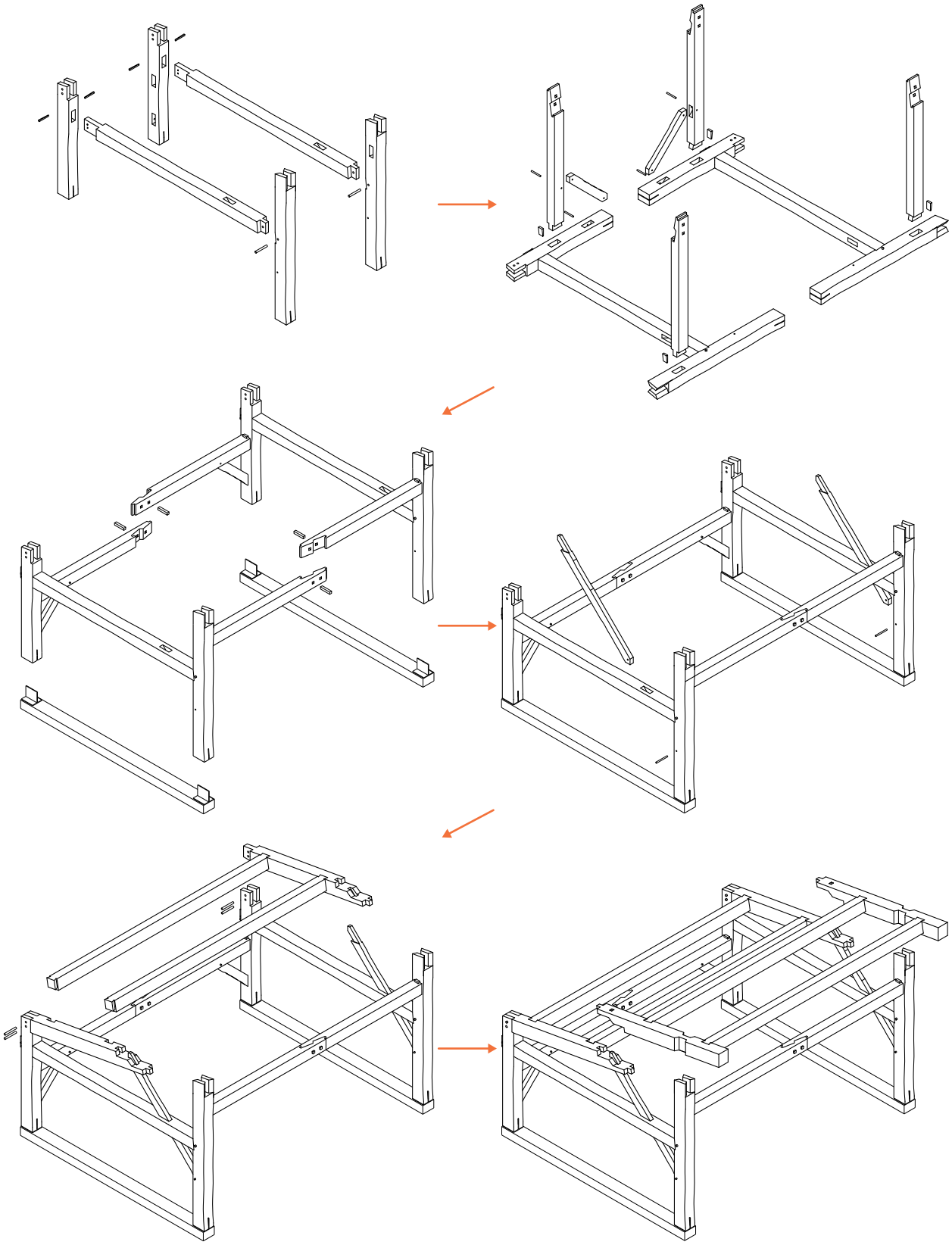

Figure 5.16

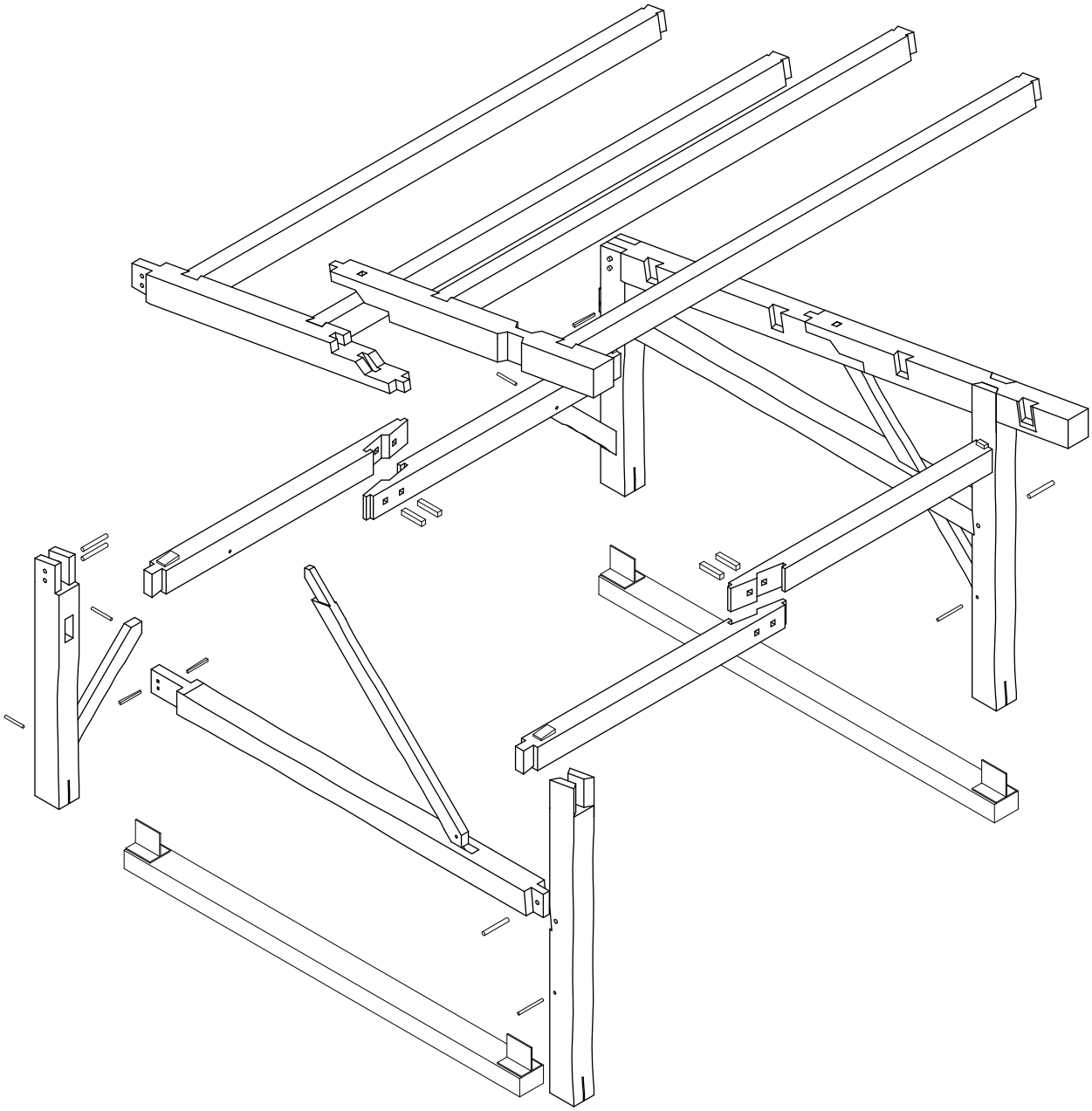

with the off cuts, structural members that were messed up by a mistake, or just lumber purchased for the structure that cannot be used as it is too warped, too many knots, or just cracked and split. *Figure 5.16* is an assembly isometric of a potential construction of one of these parking/market stalls. As you can see, I have thought through the assembly process along with the joinery to make sure that it would come together, see *figure 5.17*.

Figure 5.17

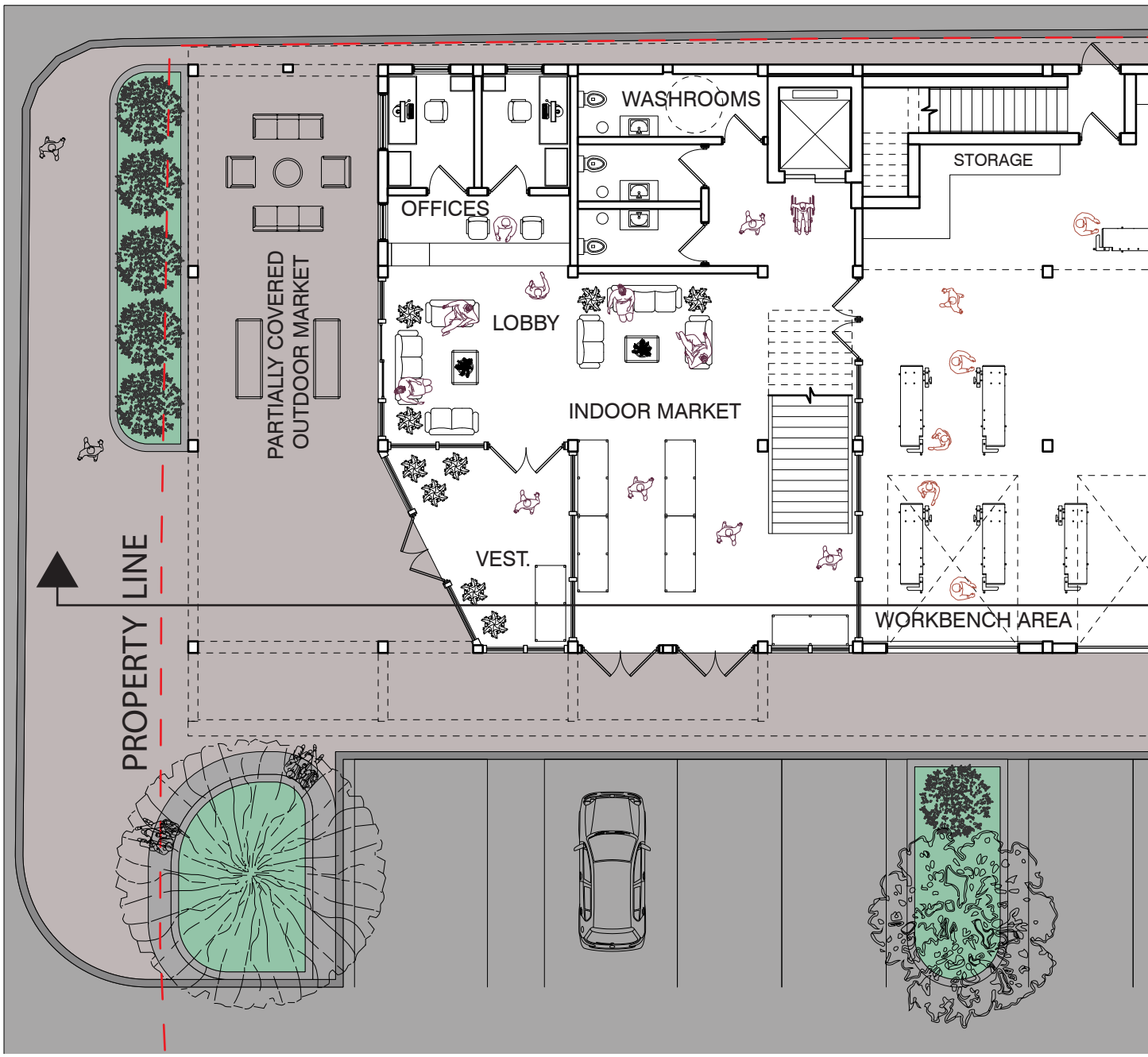

With a closer look into the detailed layout of the ground floor plan, there is a window wall that wraps around the indoor market space, this gives the public side of the building a sense of inviting you in off the street, making it feel inclusive, see *figure 5.18*. All the furniture in the lobby will be designed and made by the makers, available to be sold at the front desk. The woodshop is broken down into various smaller areas, the sanding room and the power tool area are separately enclosed to allow for varying degrees in the hvac systems in each of the spaces, letting the

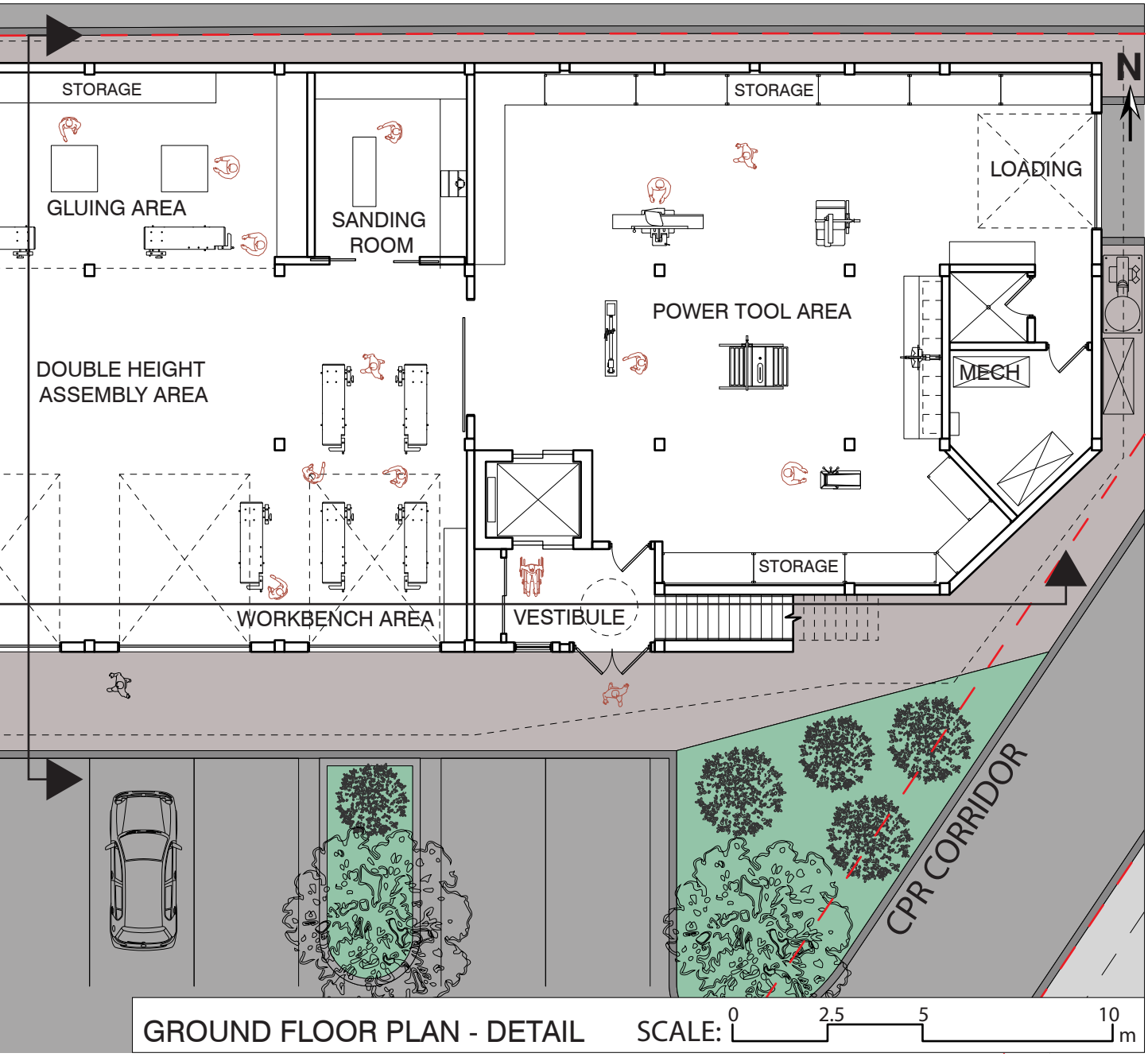

hand tool area be as naturally vented as possible. The public side is not physically connected to the workshop for someone attending the makers market but has a visual connection through the curtain wall that separates the two, sparking a sense of curiosity to get involved in the maker culture. The makers entrance at the back allows you to access the shop right away or go upstairs to the amenities and the classroom.

Figure 5.18

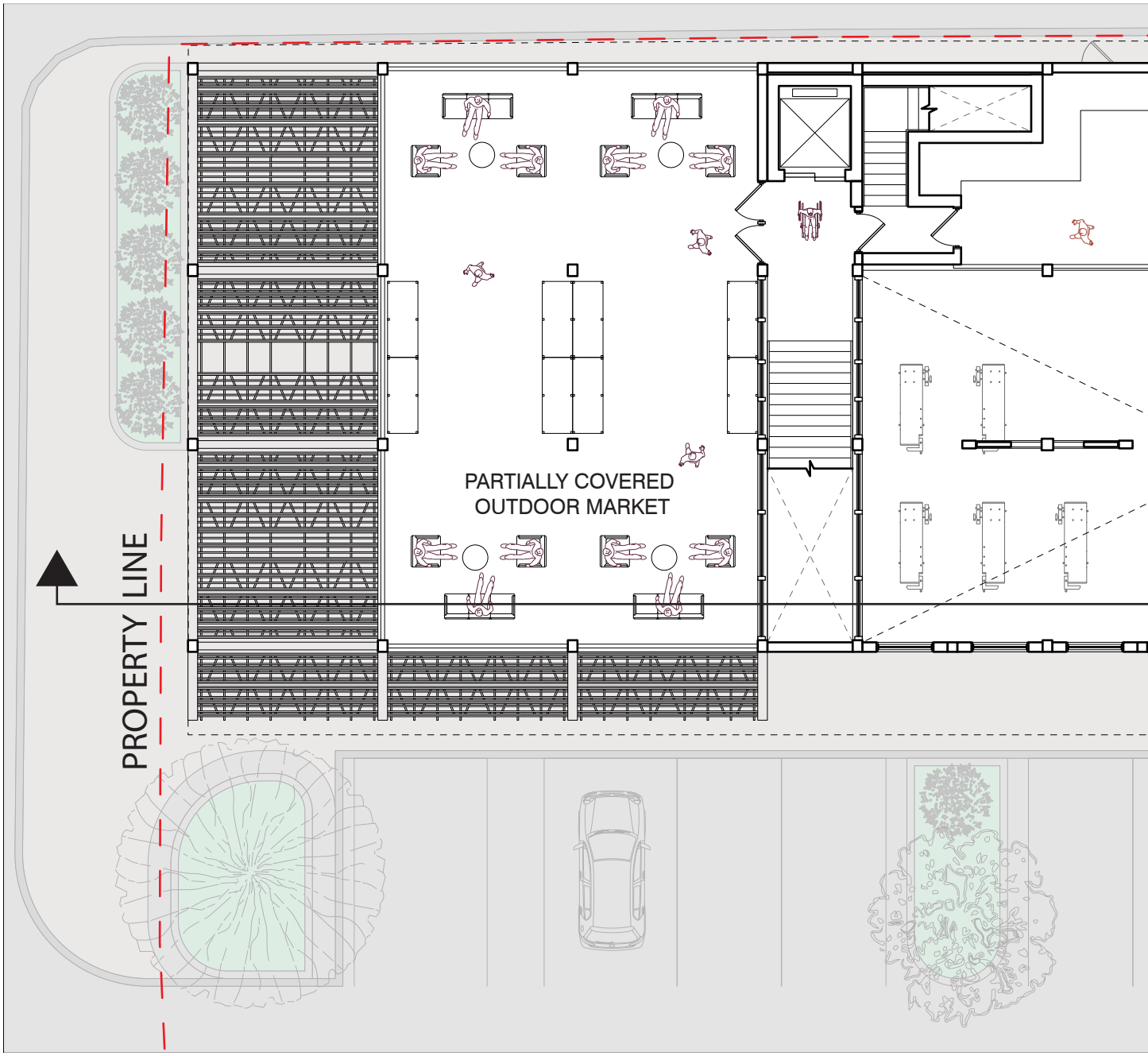

Now looking at the detailed plan of the second floor, see *figure 5.19*. The mezzanine is used by the makers to construct larger projects that can be assembled in the shop and then taken out through the garage doors to allow for larger scale community projects. With the second floor, the partially covered outdoor market will be one of many spots where a person attending the market can experience the sense of craft. The roof above this area is where the roof assembly will be stripped back to celebrate the timber framed structure, bringing attention

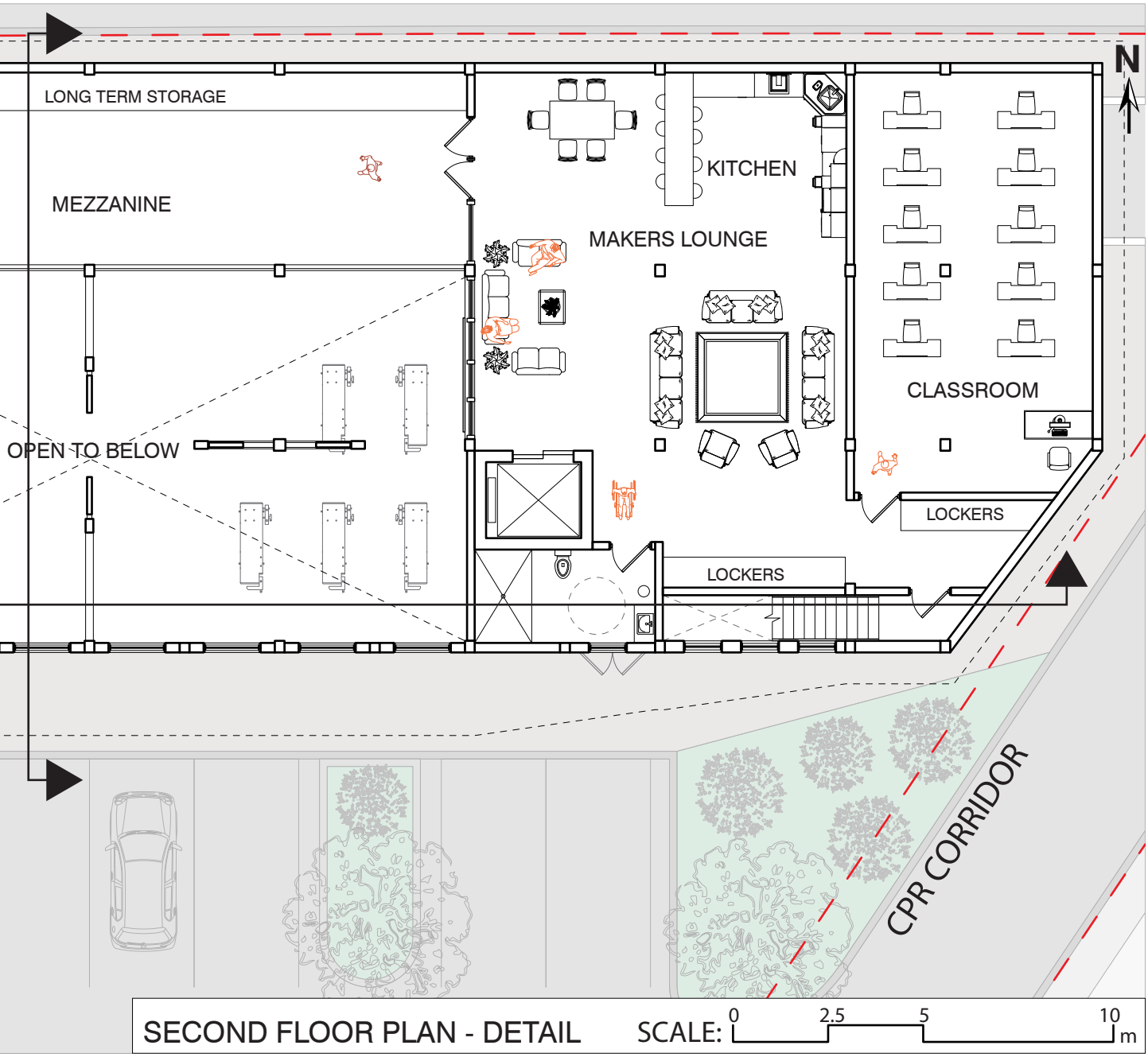

to the connections. The window wall will also allow them to look down into the double height workshop space and see the display of various joints used in the structural members that span it as the woodshop is to be a display of multiple complex joints, making the architecture didactic for the makers to learn from. The same environment is created in the makers lounge with the window wall facing the woodshop.

Figure 5.19

In *figures 5.20 & 5.21* the sections are diagrammatic, bringing attention to the spatial relationships. There are clearstory windows span across both the woodshop as well as the makers lounge area, letting indirect natural light into the building, seen in *figure 5.20*. The southern glazing is protected by the overhangs and the deciduous trees from overheating in the summer. In the colder months the angle of the sun and the loss of leaves in the deciduous trees allow for the floor to absorb the thermal energy and radiate it back to help heat the space. The north facing skylights allow for great cross ventilation, allowing for very minimal hvac in this portion of the shop, see *figure 5.21*. The roof assembly is stripped back to the framing with a protective translucent rainscreen on top above the second-floor exterior market space. This allows for the visual effects of the structure to be highlighted while still protecting the structural wood joints from the elements.

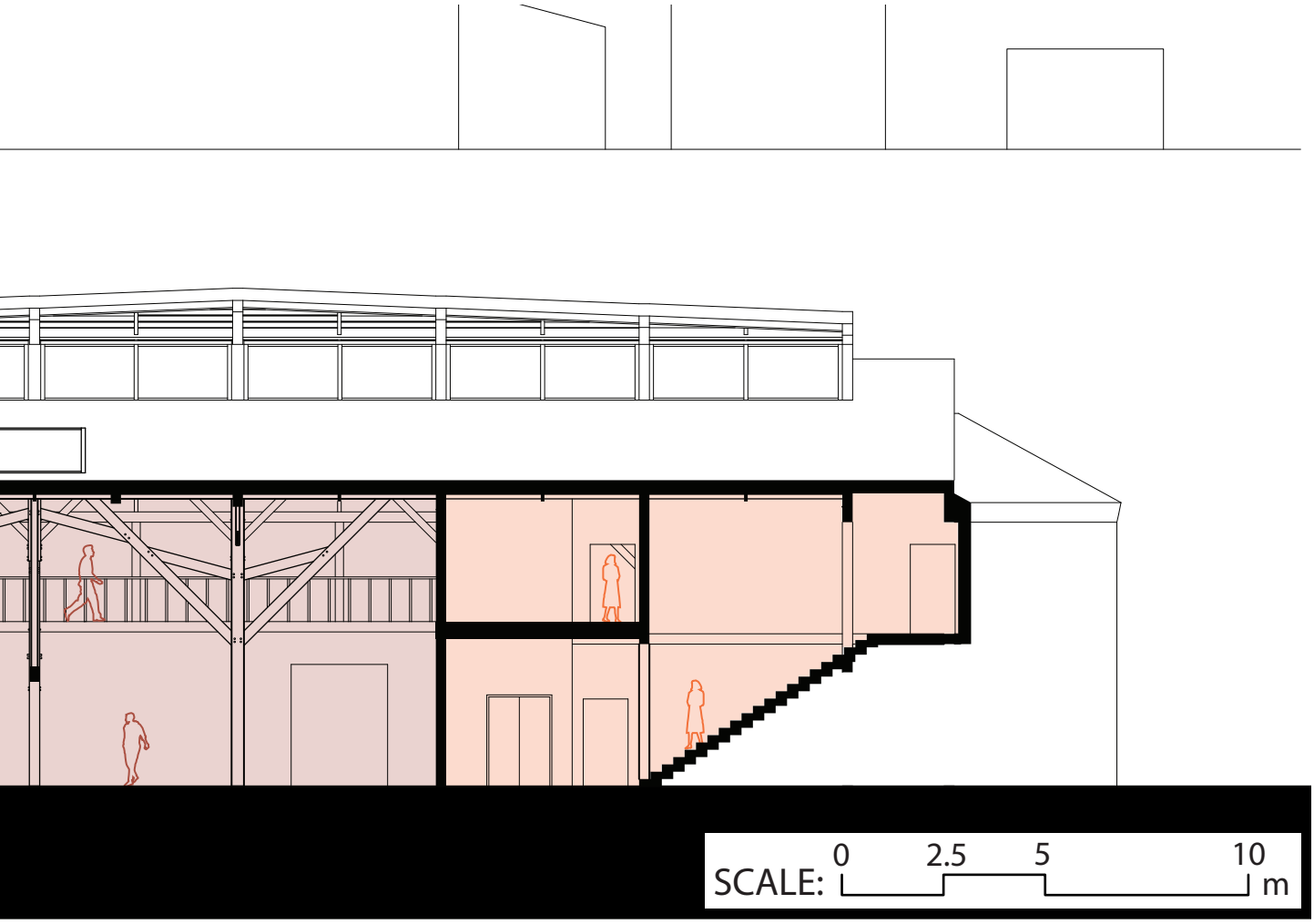

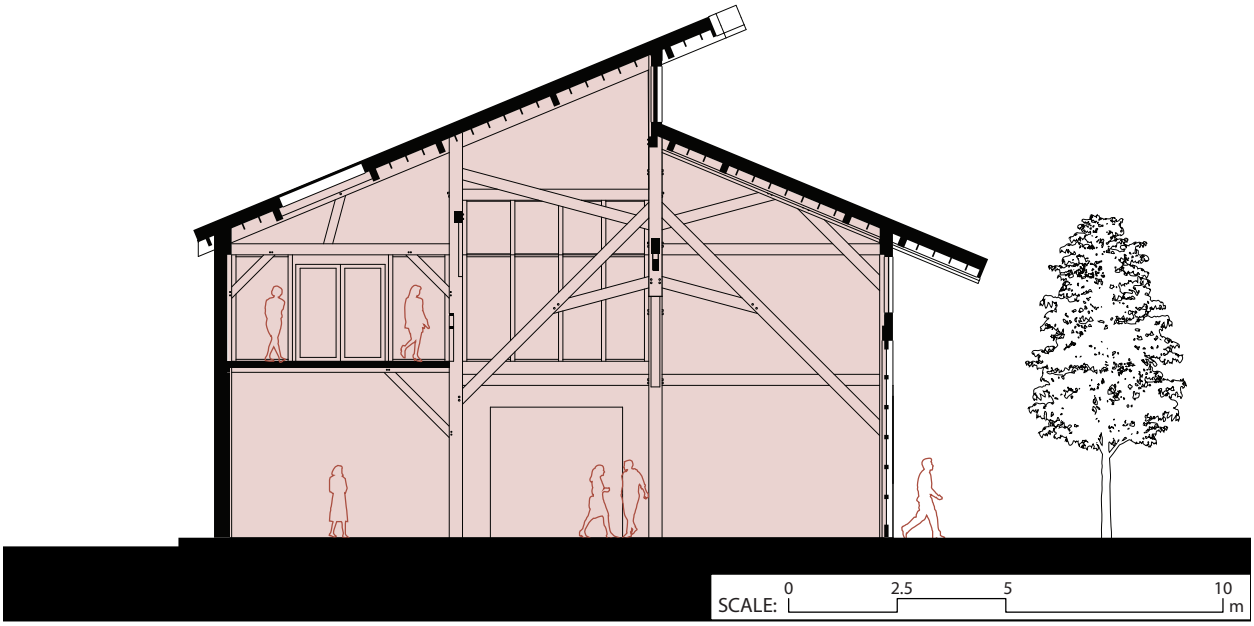

Figure 5.20 / Figure 5.21

Figure 5.22

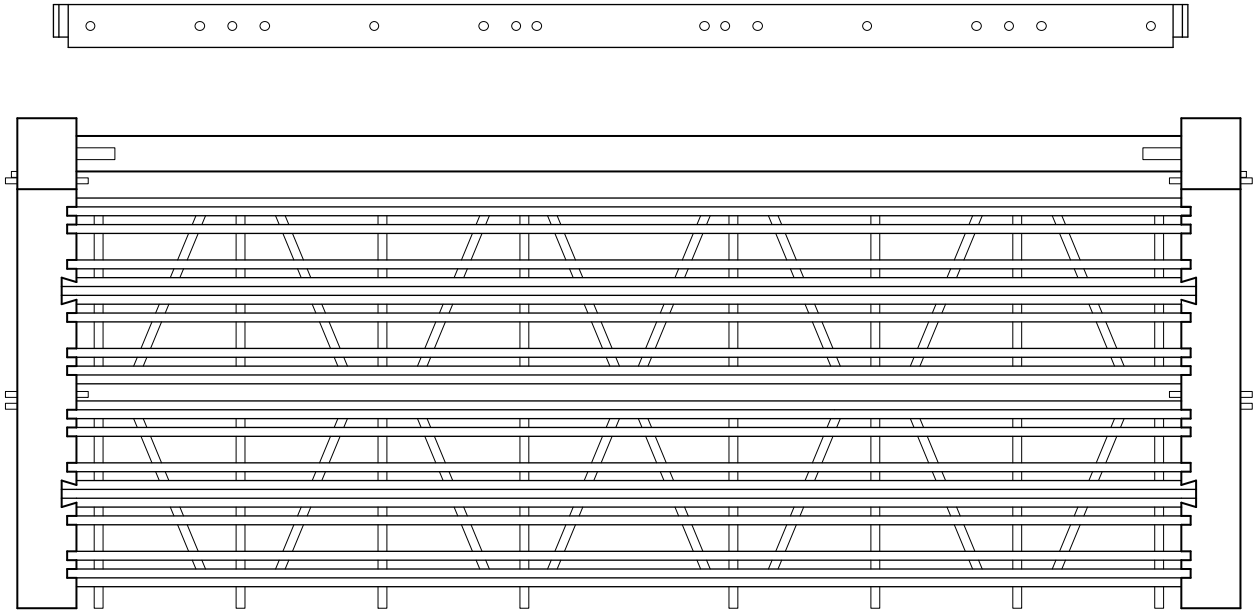

Pay specific attention to how the deconstructed DLT canopy, and the skeletal frame of the building provide a soft transition from the street scape into the building and project site, see *figure 5.22*. The way the planters are positioned relative to the main entrance to the building also creates an entrance to the site for a pedestrian, drawing someone off the street. The DLT canopy that wraps around to the south side of the building is one of the first intricate details inspired by the workbench this visitor would experience when visiting the building.

The unique angled dowelling is celebrated by the deconstruction of the DLT panel, drawing attention to it and celebrating it, see *figure 5.22*. The DLT flooring in the building is made up of smaller panels that are dropped into the timber frame, utilizing simple notches to hold it in place with one dovetail per panel to help provide extra rigidity to the structure. This same method is showcased and celebrated in the canopy, see *figure 5.23*.

In the next perspective, *figure 5.25*, the cross section of the timber framed barn is noticeable as it seamlessly blends into the contemporary building as the structure of the building is slowly being absorbed into the building envelope until it is complete at the back wall. There is a level of transparency that seeps into the street, as well as the shading from the deconstructed DLT canopy, creating a very pleasant atmosphere on the ground

Figure 5.23

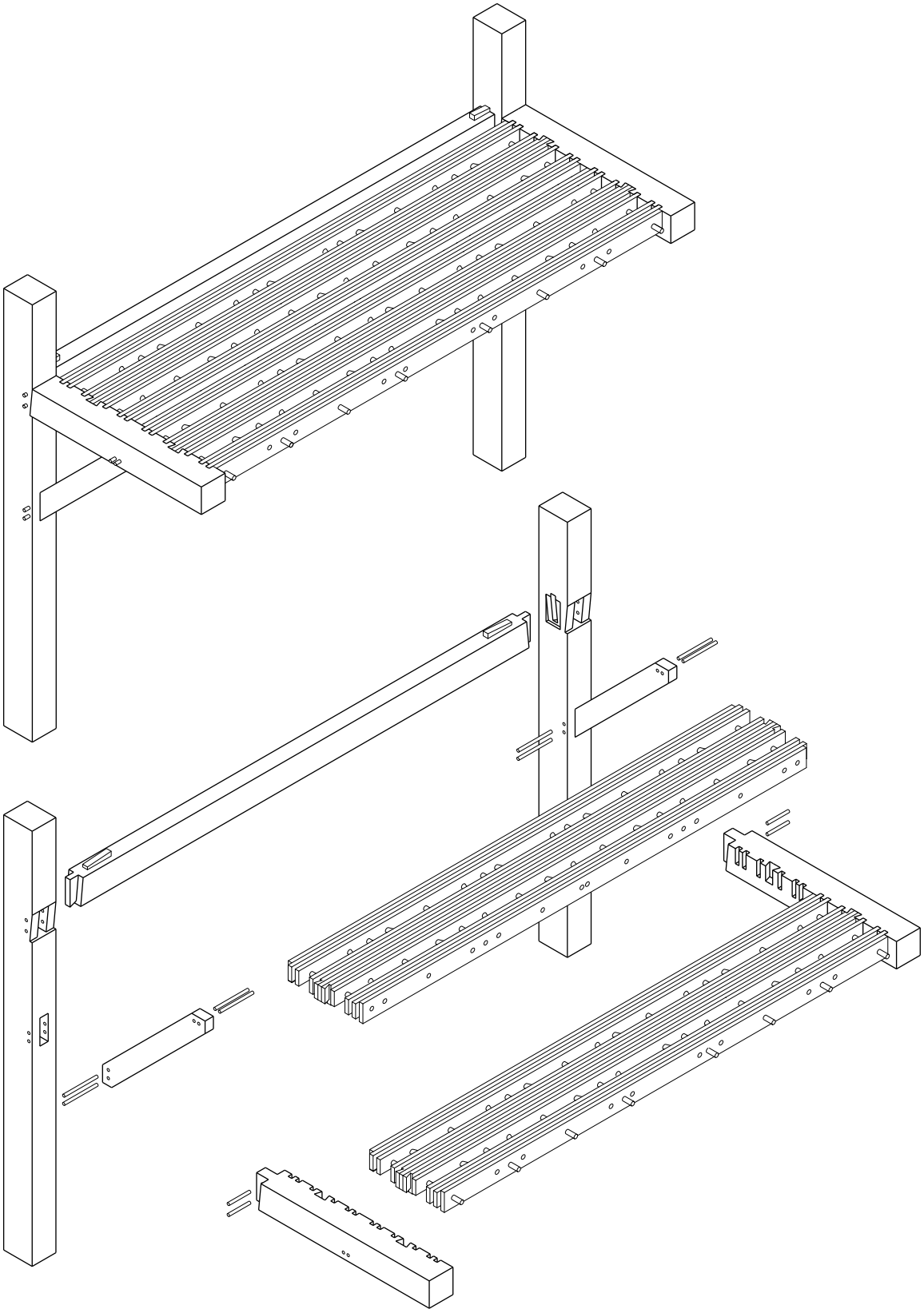

Figure 5.24

Figure 5.25

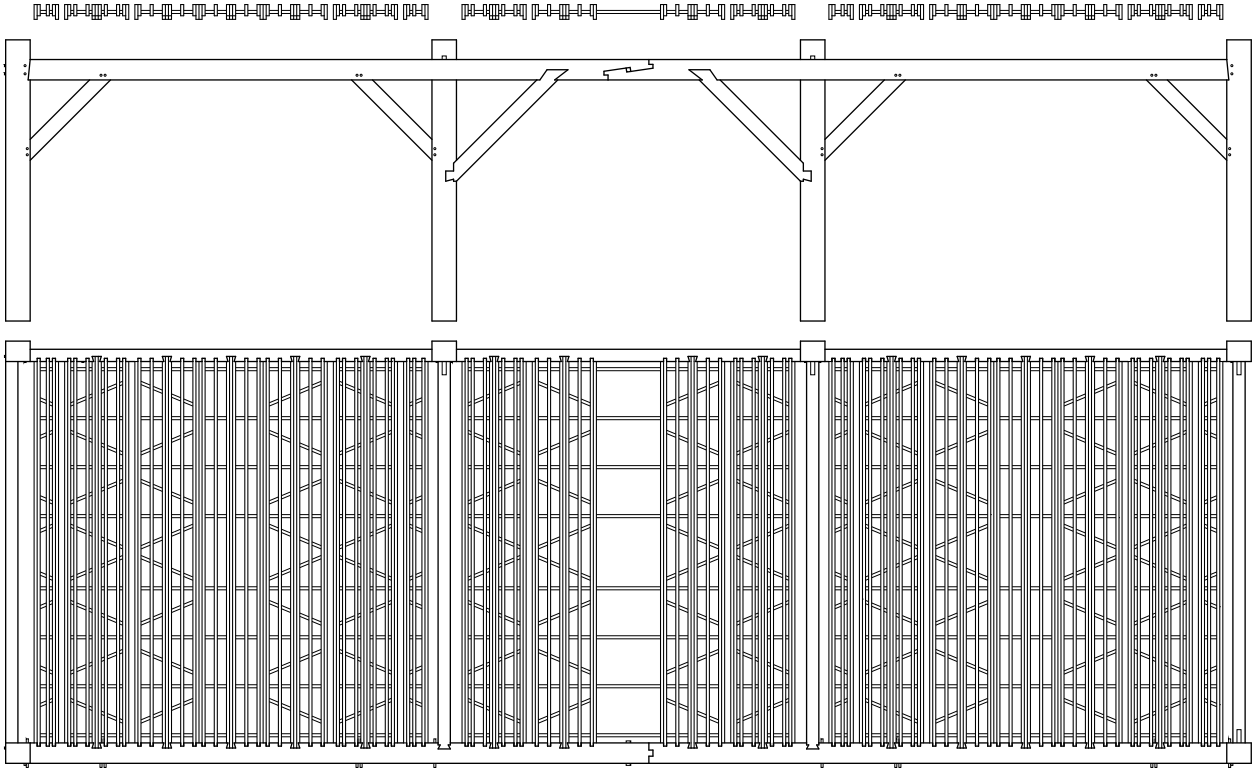

plane that draws you into the market space. The sun illuminates and makes the deconstructed DLT canopy look as if its glowing and by using a dark stain on the dowels it makes them pop with the contrast, see *figure 5.25*. The DLT panels are deconstructed in a similar way to the canopy that wraps around the South face of the building but in this, the centre is stripped back to the perpendicular dowels, drawing your eye to the mortised rabbeted oblique scarf joint see *figures 5.26 & 5.27*. I was informed from my physical experimentation in making this joint, allowing me to understand how it comes together so I could factor it into the assembly process of the canopy. I was inspired from the workbench in using Joinery as a form of ornamentation, invoking a sense of craft.

This next render is of the permanent maker market for indoor furniture and smaller hand crafted items such as cutting boards, see *figure 5.28*. This will operate every day as a store to provide a constant flow of revenue for the makers and the building, creating a sustainable program that is subsidised by the funds to allow it to be more financially accessible to everyone.

Figure 5.26

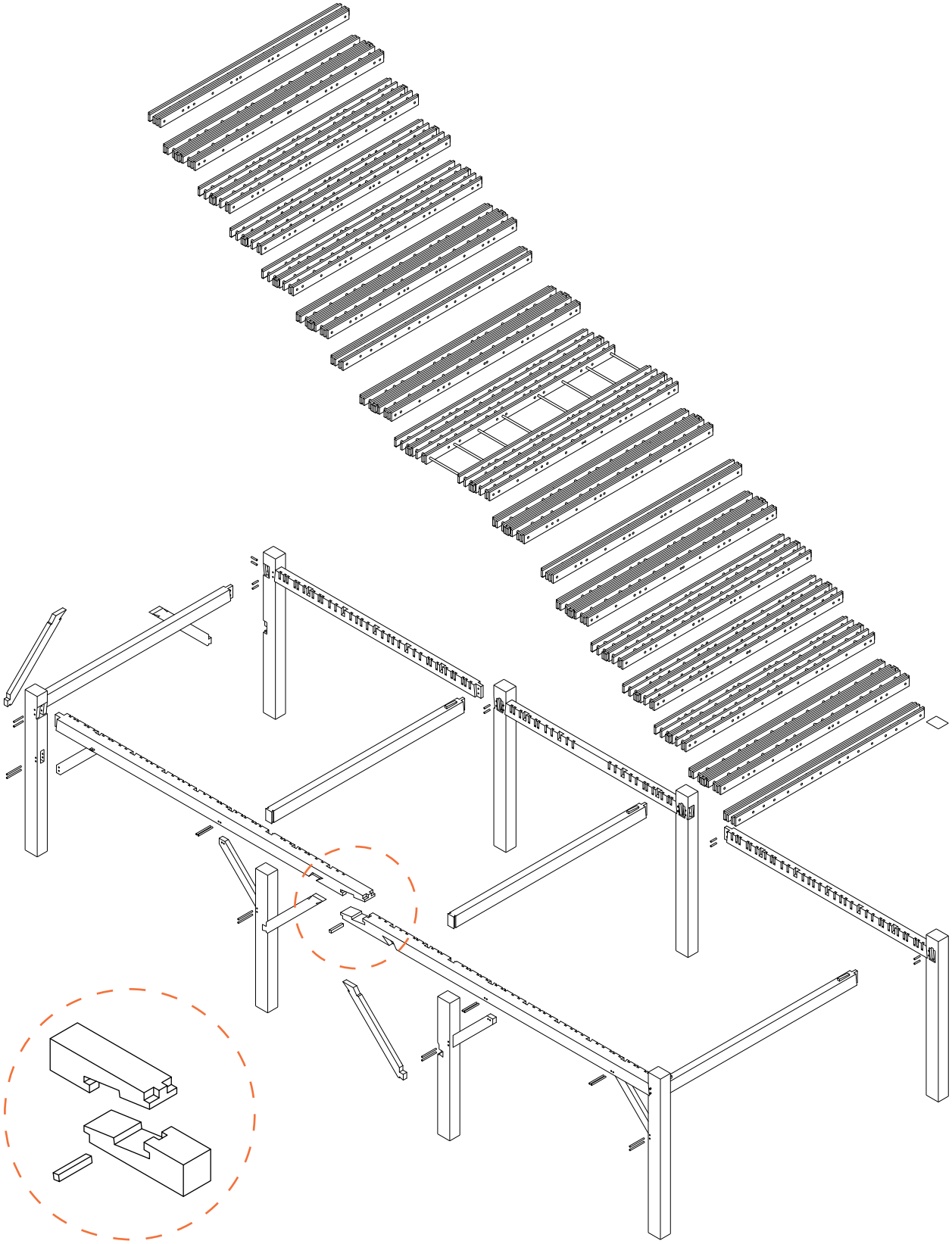

Figure 5.27

Figure 5.28

Figure 5.29

The ribbed Underside of the DLT flooring is simply made by using a combination of 2x6's and 2x8s to create an animated ceiling that also helps to control the acoustics of the space. The curtain wall on the left allows for a transparency into the woodshop, celebrating the hand crafted process.

Following the stairs up to the second floor, you come to the partially covered outdoor market space, see *figure 5.29*. Here the structural connections are fully exposed and celebrated, creating a sense of craft.

The open air with the shading from the roof creates a pleasant atmosphere. The use of the translucent recycled plastic on the roof allows for the exposed structural wood joints as it provides protection from the elements for them while letting a softer light through to keep the space illuminated and keeping the visual focus on the exposed structure.

The structural language and assembly process of this portion of the building is broken down in the following isometrics, see *figures 5.30 – 5.39*. The joinery had

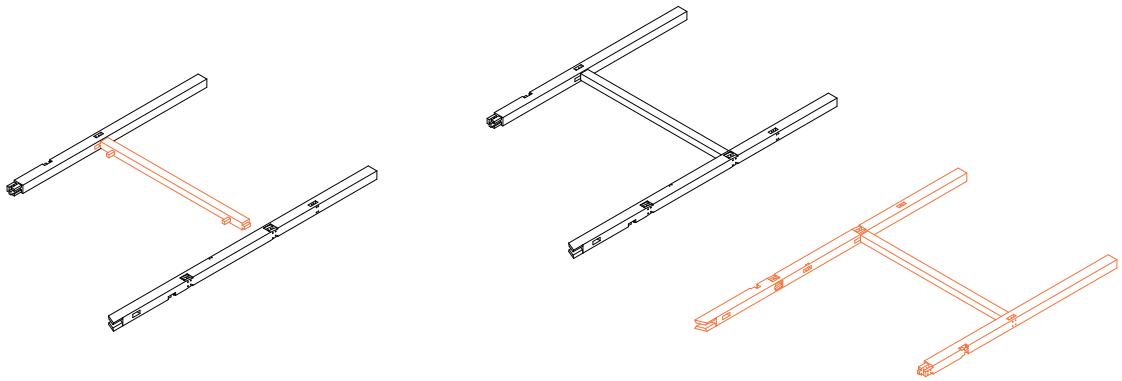

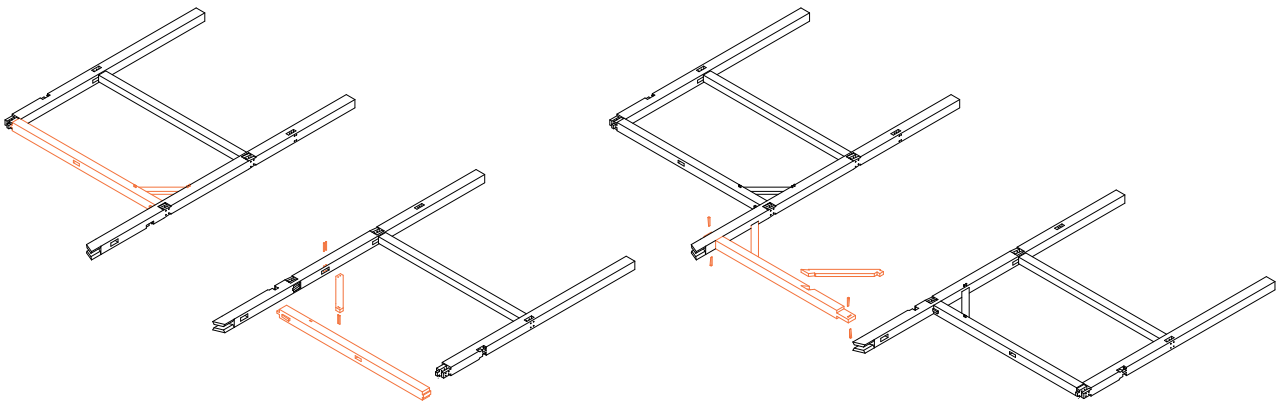

Figure 5.30 / Figure 5.31

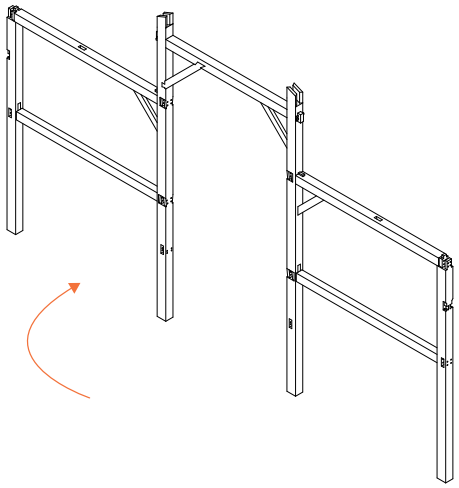

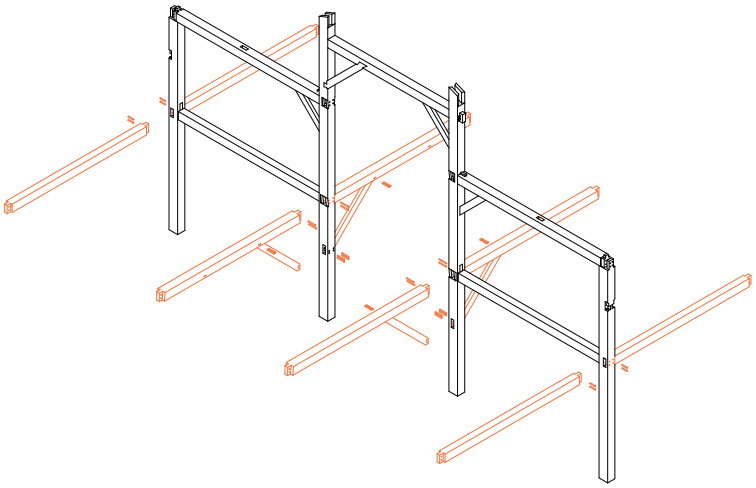

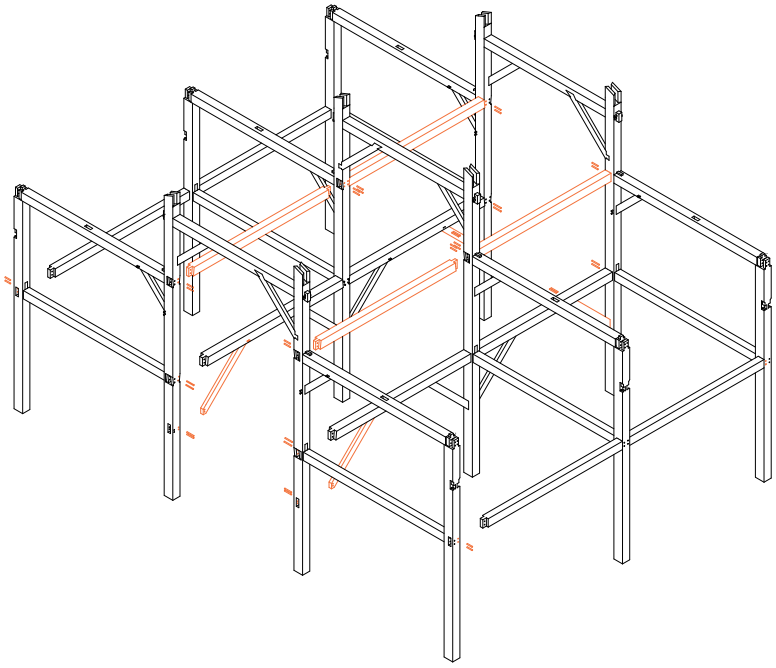

Figure 5.34 / Figure 5.35

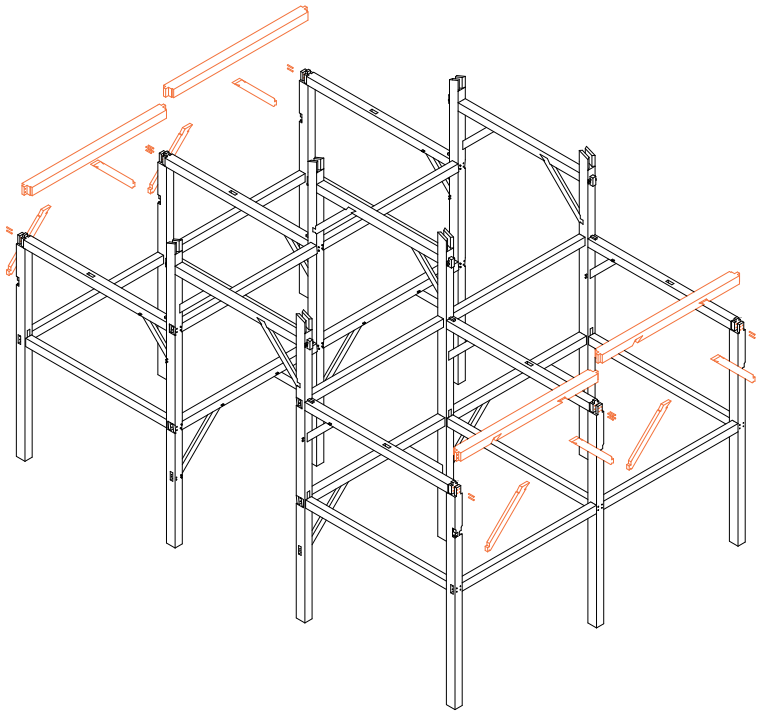

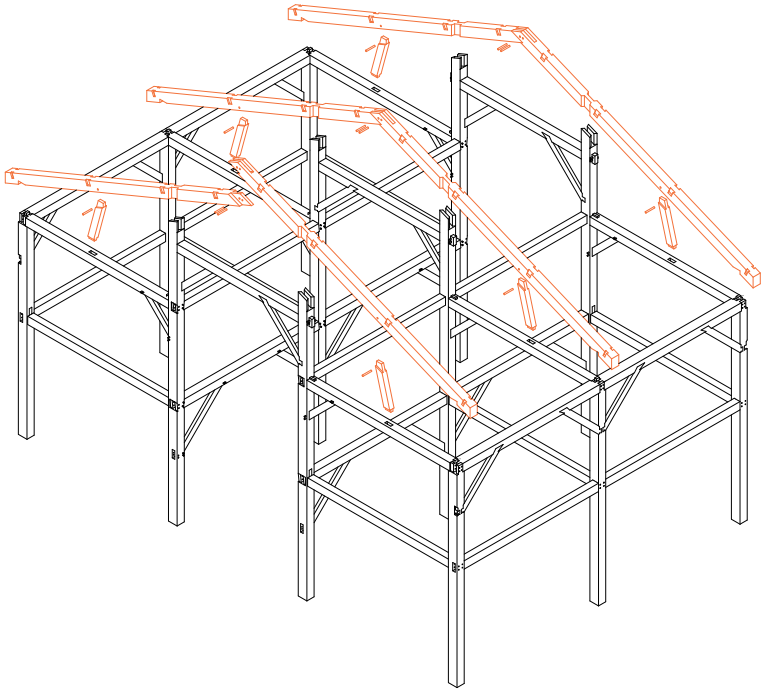

Figure 5.32 / Figure 5.33

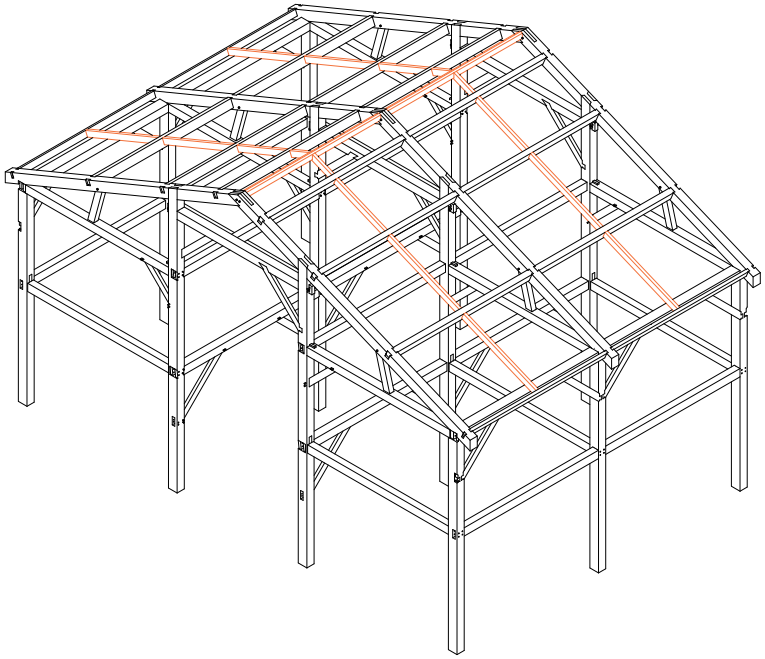

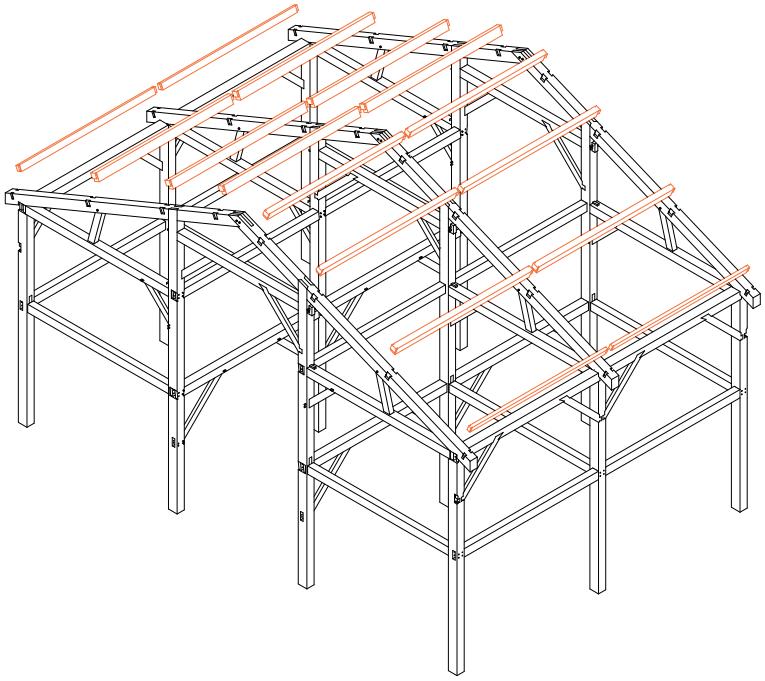

Figure 5.36 / Figure 5.37

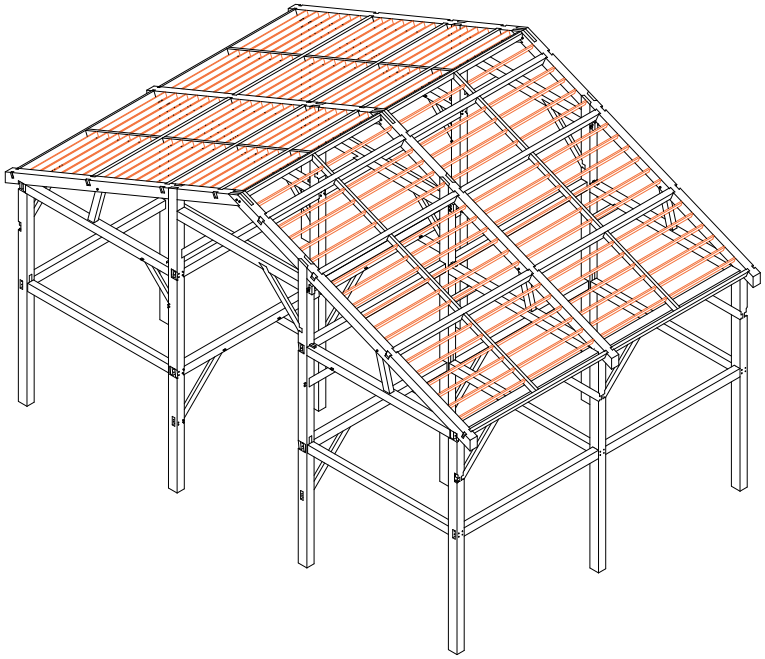

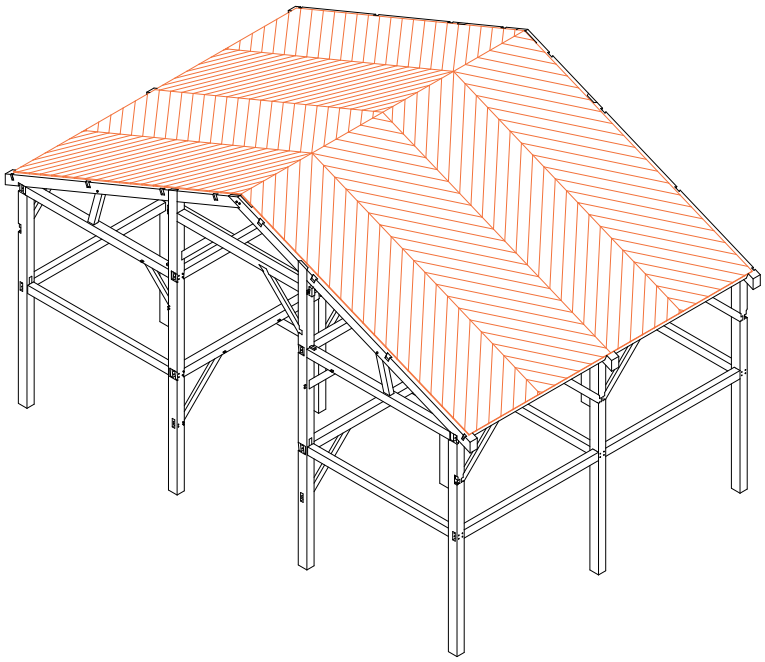

Figure 5.38 / Figure 5.39

to be done in a way that worked with the assembly process of the timber framed structure. In creating these drawings, the connections were refined as I was building the structure. Some joints didn't work in the initial design as there were opposing motions in which they needed to be assembled, which were only picked up when I went through the motions of constructing the building through this series of drawings. I was inspired to refine the design in this manner from the making process of my workbench as I had to change the final design of it as I was assembling it and realized some of the joints needed to be refined so that it would come together properly.

This next render is what I like to call my wood chandelier. The carefully placed south facing skylight illuminates it, celebrating the joinery and structural creativity, see *figure 5.40*. This came to fruition from the need to eliminate that centre column to open the shop floor for lager scale assemblies, see *figure 5.41*. By providing that large open area in the middle of the shop I was even able to fit in a partially constructed model of the frame to the tiny house I designed and helped build for my brother. On the sides are where my workbench will be, meant for smaller finer hand crafted projects. The large amount of natural lighting and cross ventilation create an invigorating atmosphere. The structural language of the woodshop is different from the rest of the building to account for the complex truss system that I created. The structural language and assembly process of this portion of the building is broken down in the following isometrics, see *figures 5.42 – 5.61*. The refinement to the design of the structure and the connections was the same as the structure for the market portion of the building after going through the meticulous process of these assembly isometrics.

Figure 5.40

Figure 5.41

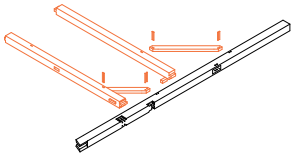

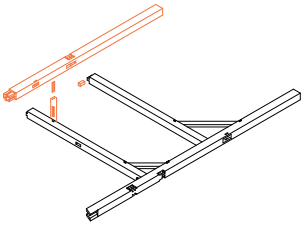

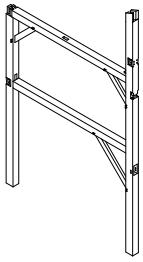

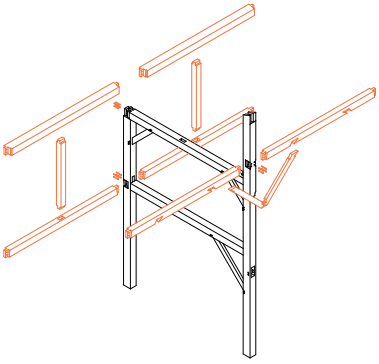

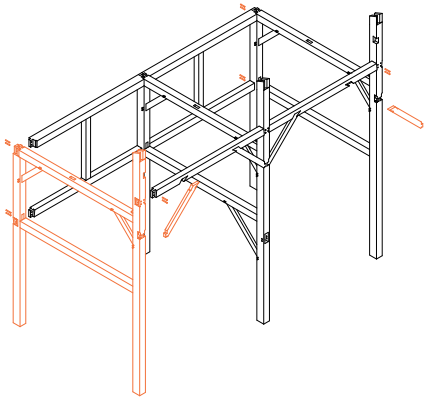

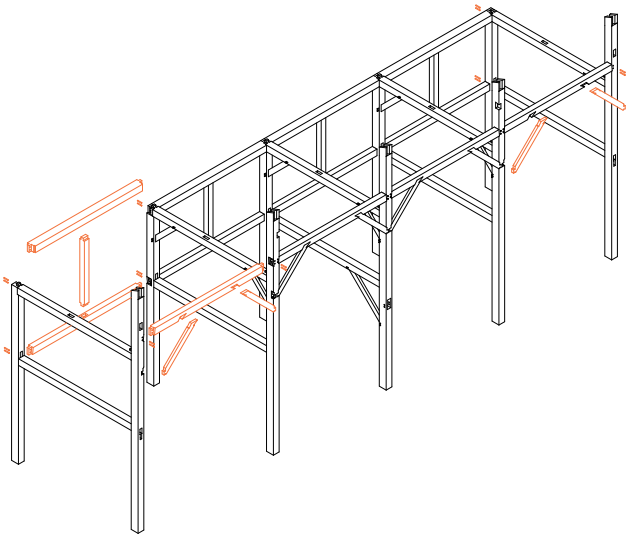

Figure 5.42 / Figure 5.43 / Figure 5.44

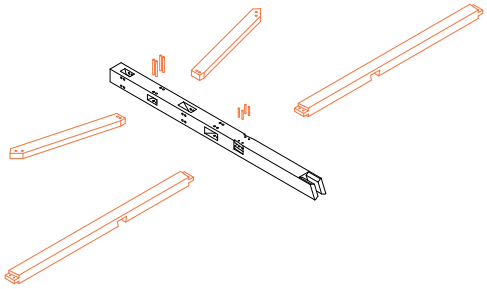

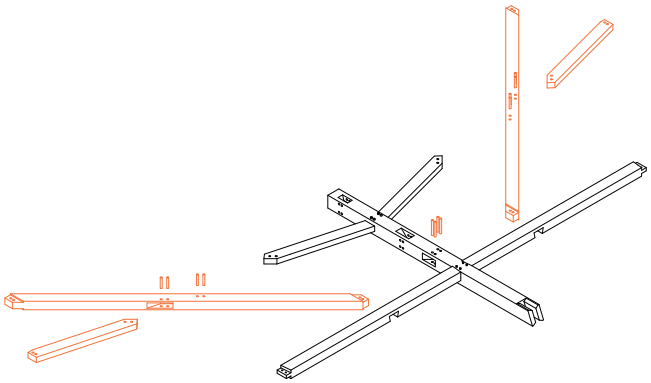

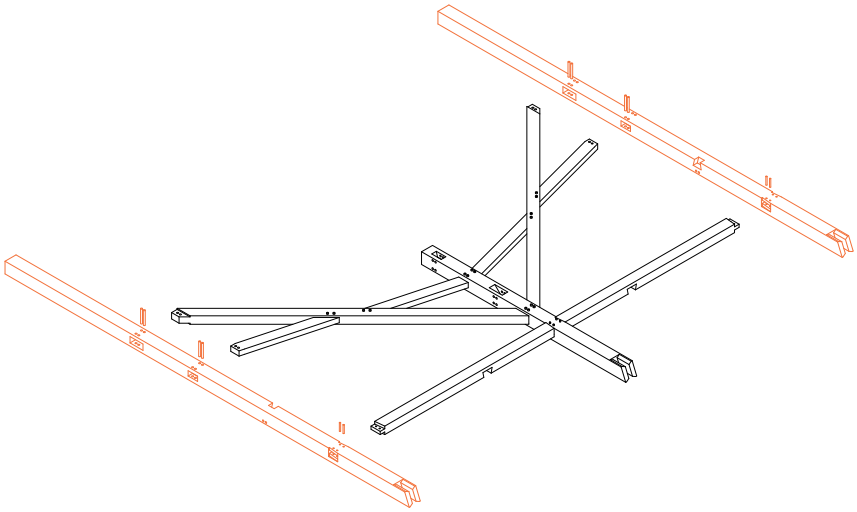

Figure 5.45 / Figure 5.46 / Figure 5.47

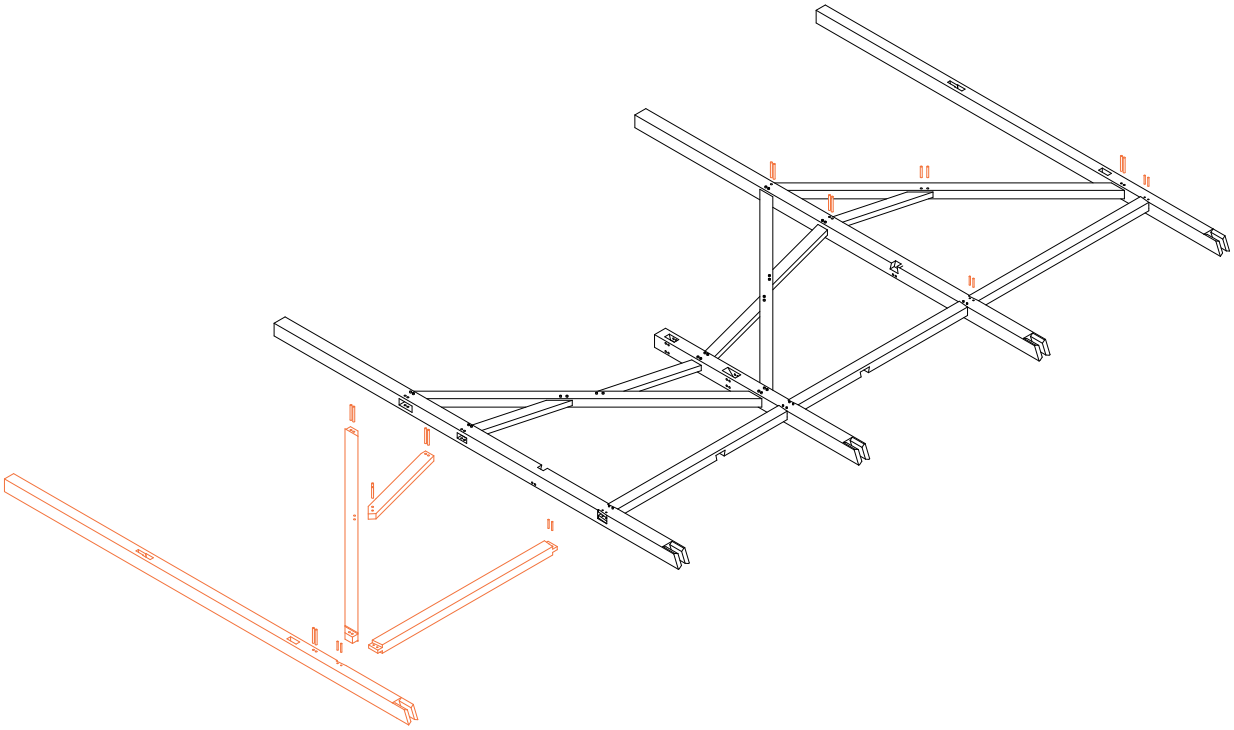

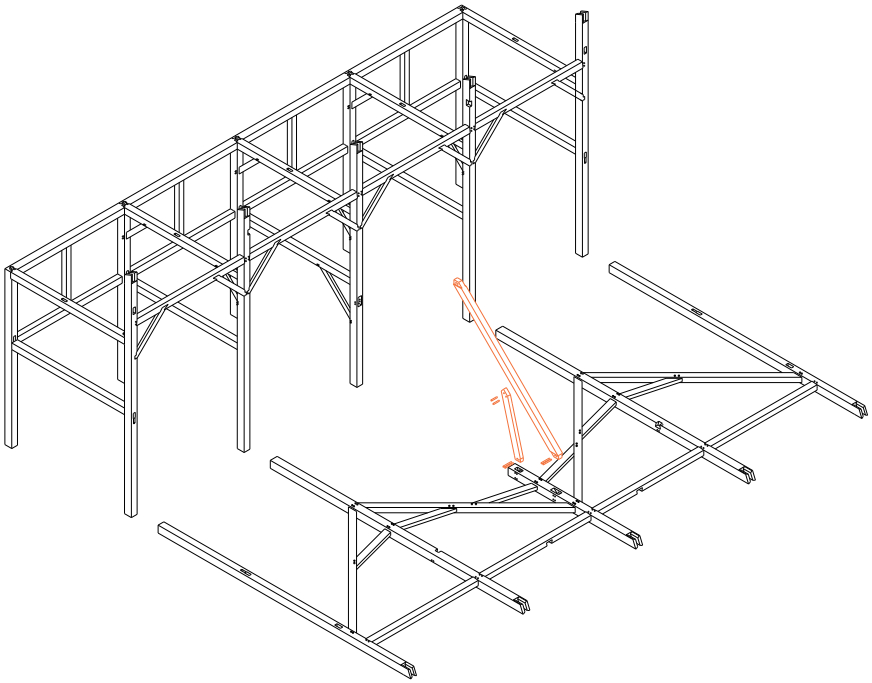

Figure 5.48 / Figure 5.49

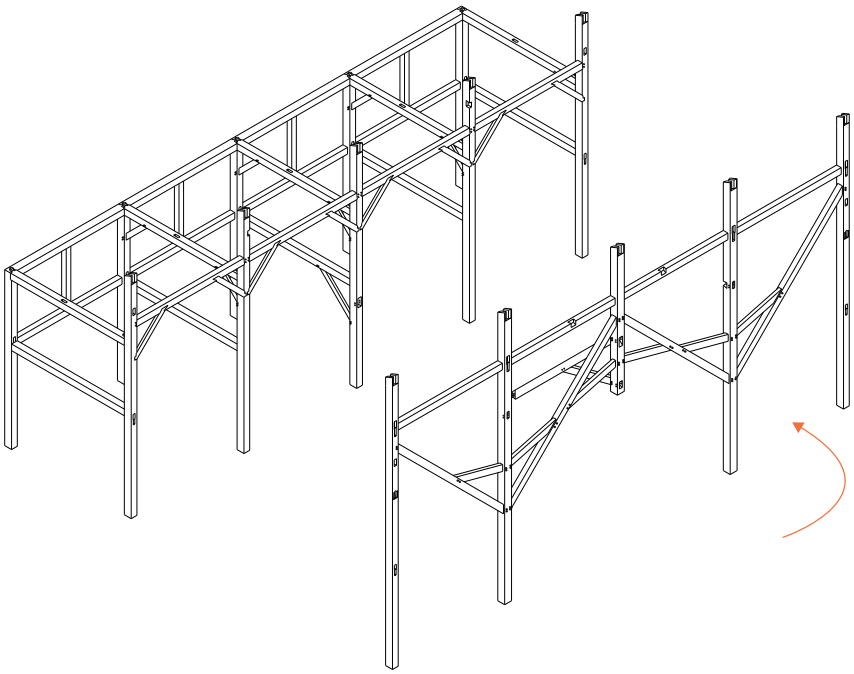

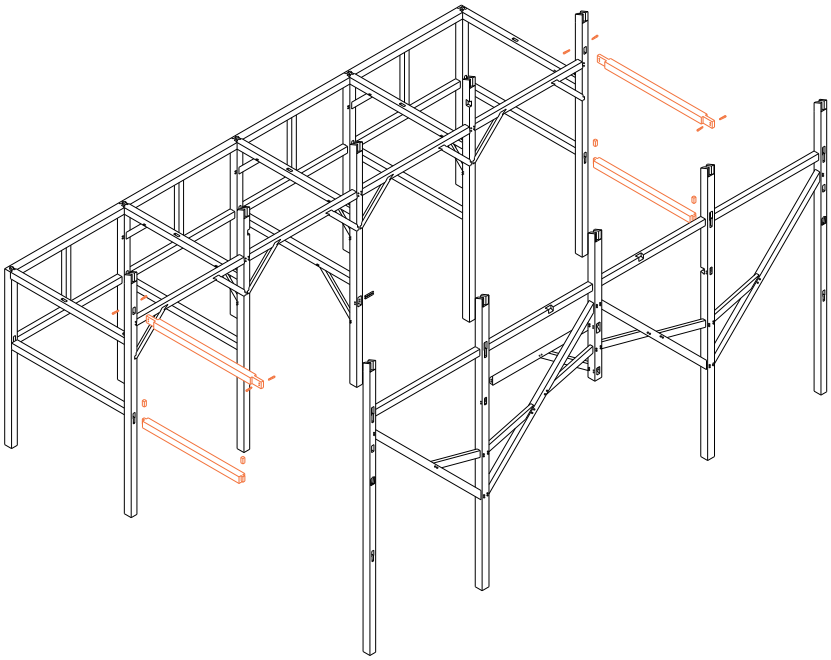

Figure 5.50 / Figure 5.51

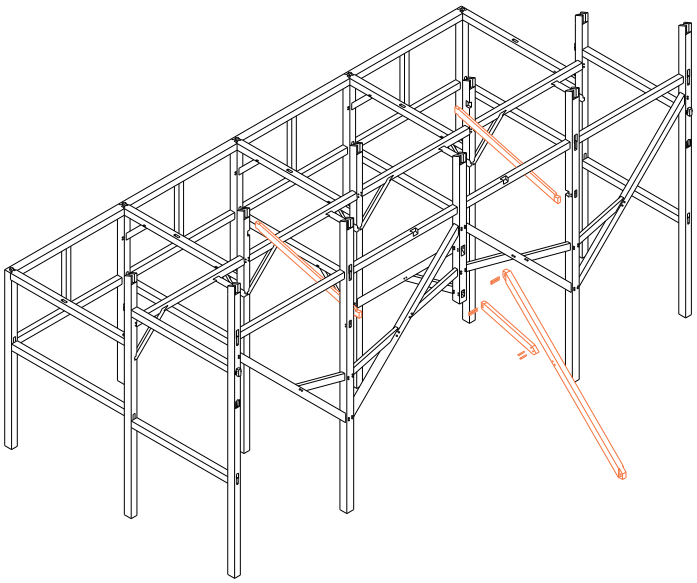

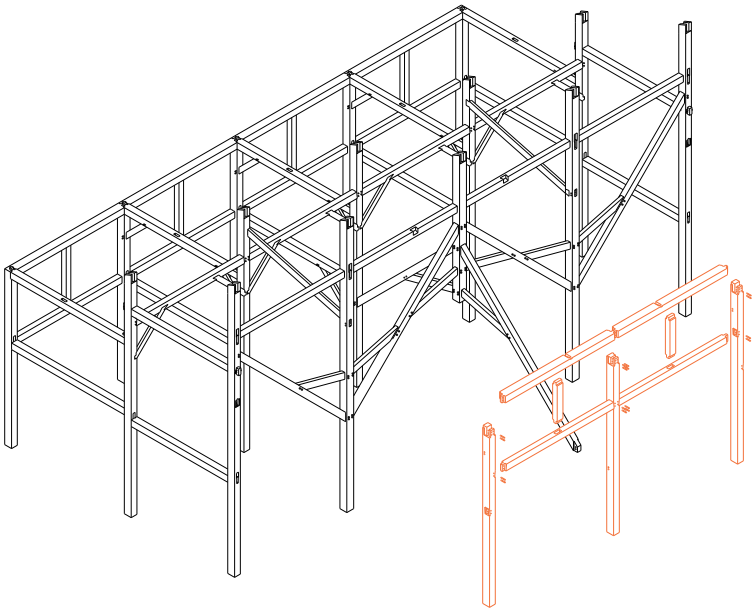

Figure 5.52 / Figure 5.53

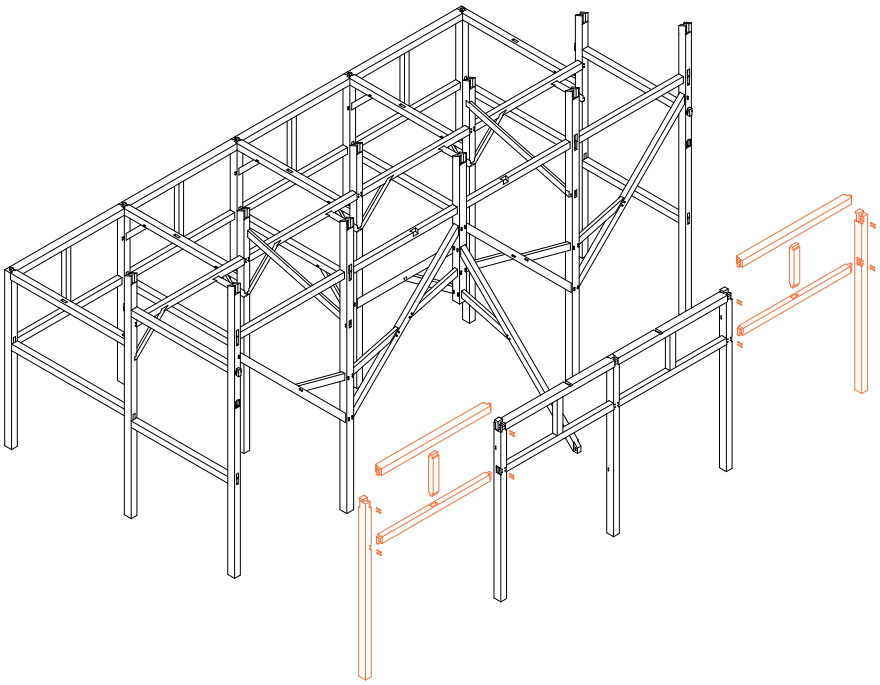

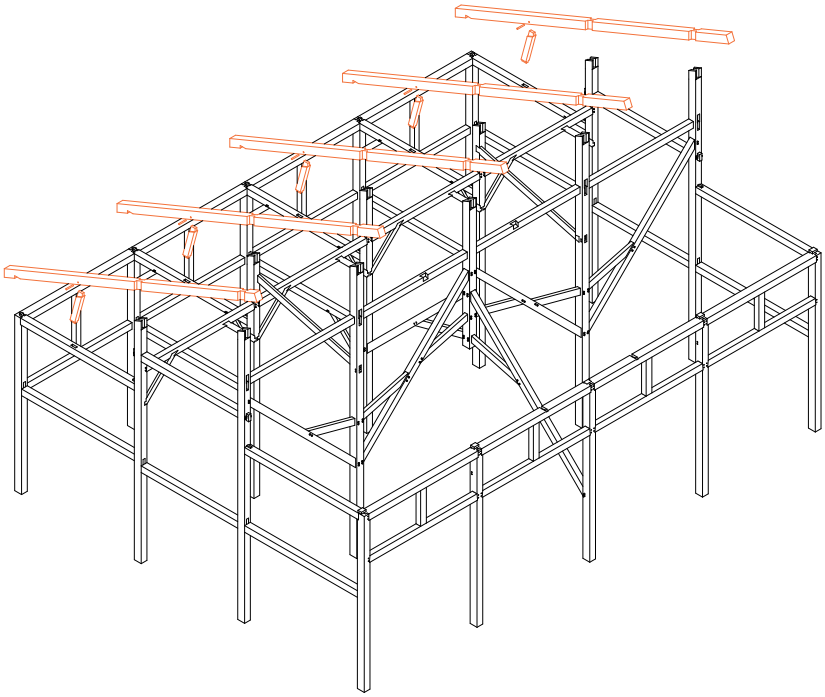

Figure 5.54 / Figure 5.55

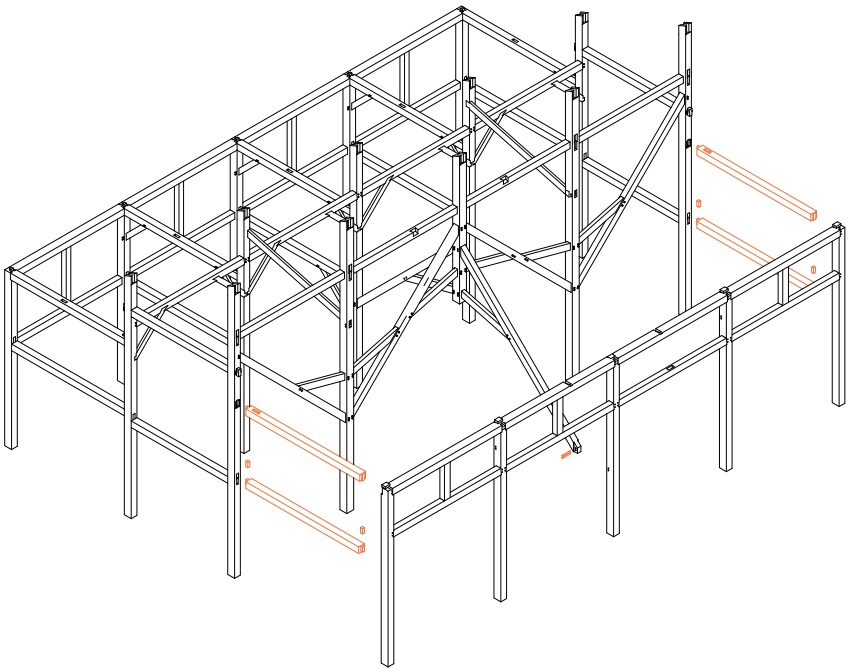

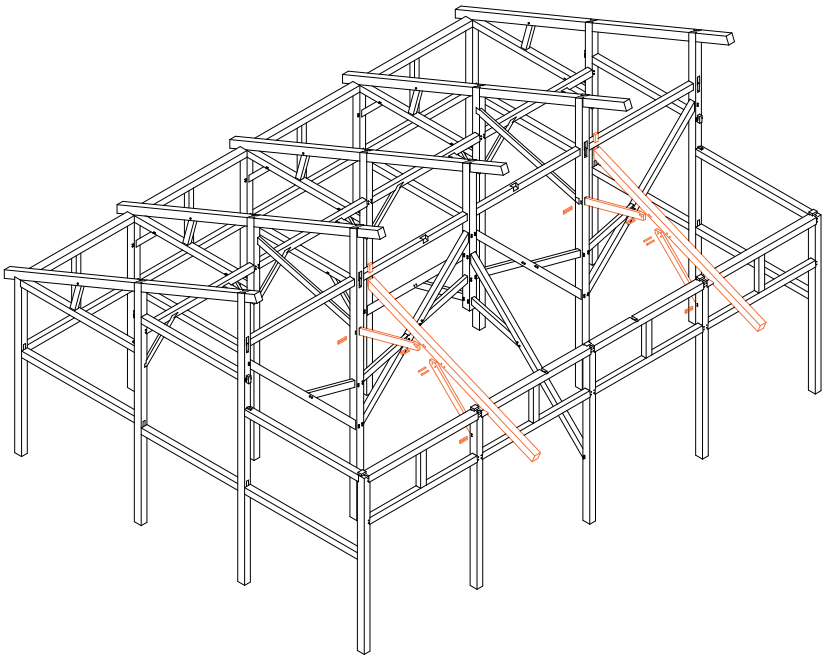

Figure 5.56 / Figure 5.57

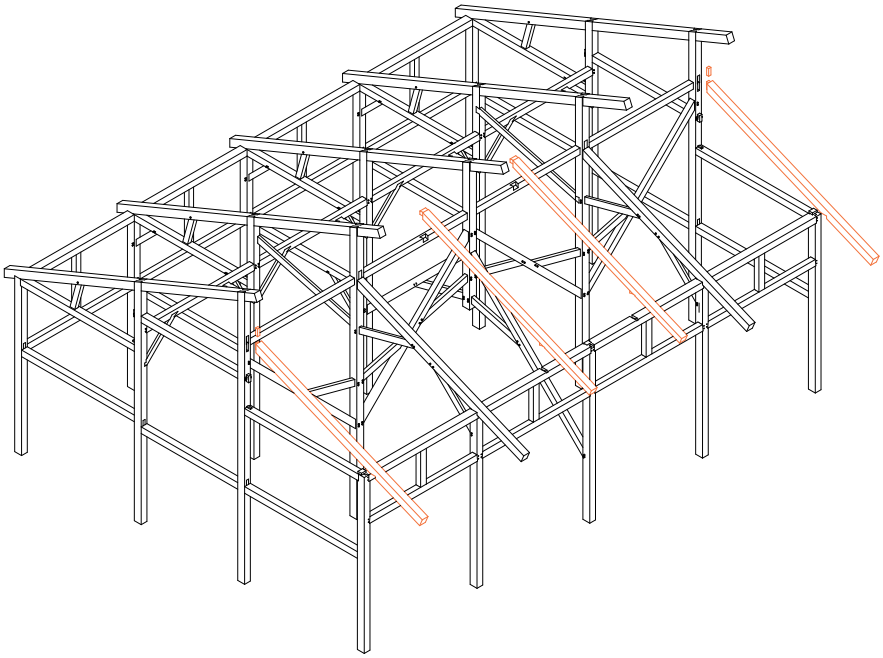

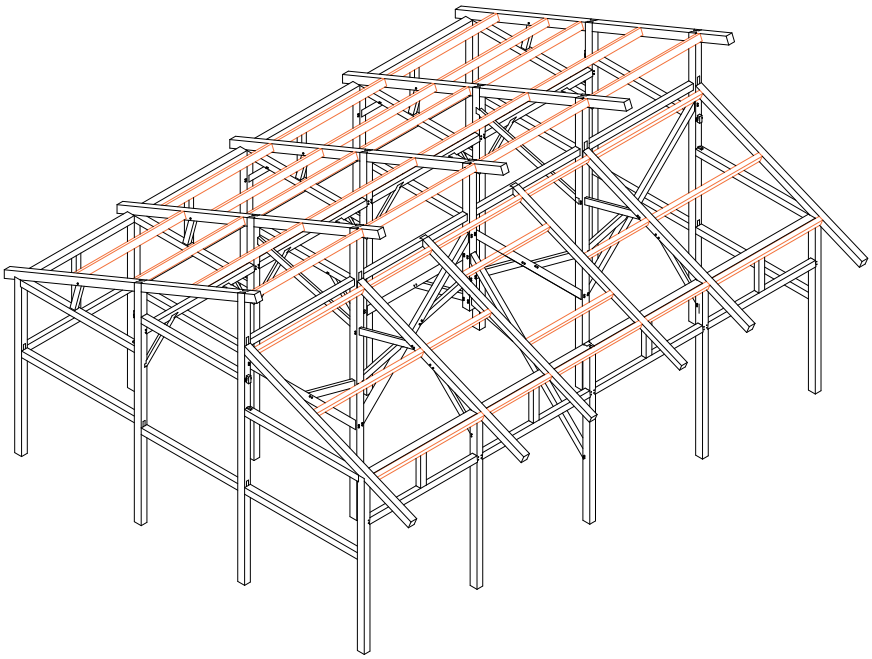

Figure 5.58 / Figure 5.59

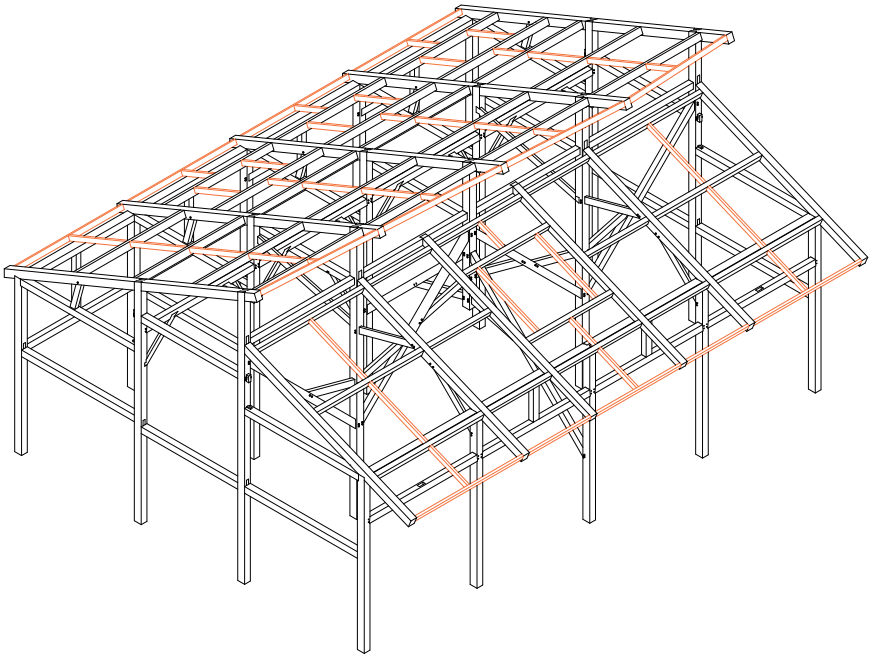

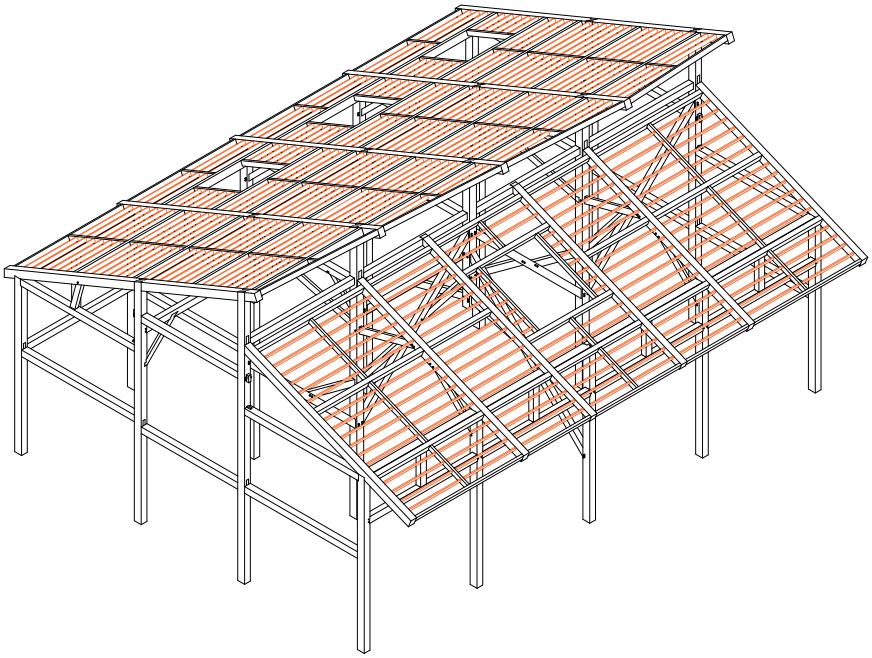

Figure 5.60 / Figure 5.61

ENDNOTES

1 “Localarchitecture,” LOCALARCHITECTURE, accessed February 22, 2022, https://localarchitecture.ch/. : “Tardio Architecte,” DJURIC, accessed February 22, 2022, https://www.djuric-tardio.com/.

2 “Localarchitecture,” LOCALARCHITECTURE, accessed February 22, 2022, https://localarchitecture.ch/.

3 Ibid.

4 “Tardio Architecte,” DJURIC, accessed February 22, 2022, https://www.djuric-tardio.com/.

5 Ibid.

6 Jennifer Fortuna, “The Art and Process of Wood Carving as a Meaningful Occupation,” The Open Journal of Occupational Therapy 7, no. 2 (n.d.).

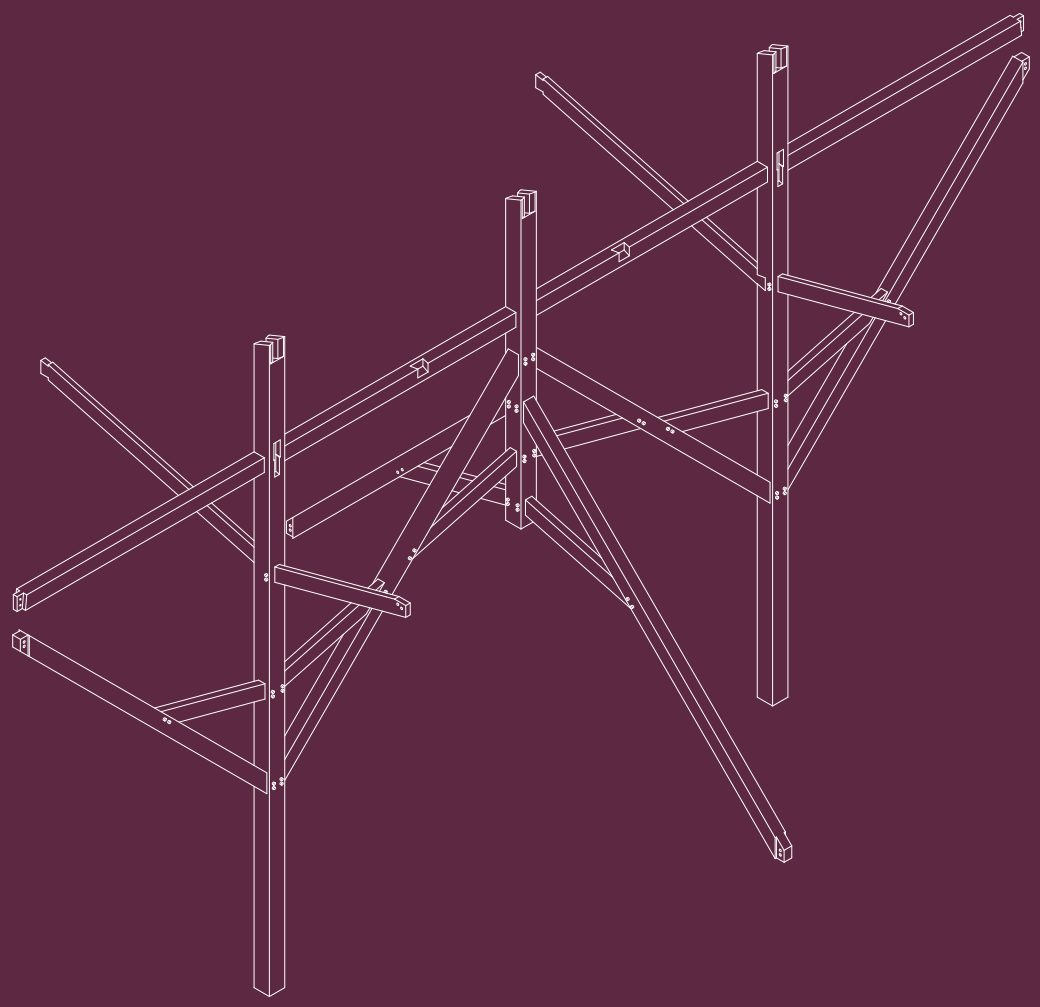

Figure 6.00

06

CONCLUSION

This last section will be a brief review of each of the chapters, focusing on the key takeaways from the research. Then an examination will occur of how the learning through making methodology research was constantly building on itself to inform the next steps in the process. A thorough conclusion wil be stated on how the research question was answered through the design of the final project and how it was informed and inspired by the workbench. Also, moments will be highlighted where workbench and a sense of craft shines through the final design again.

6.1

MANIFESTATION OF CRAFT IN ARCHITECTURE

The research portion of the thesis began with a review of David Pye's, *The Nature and art of Workmanship*; Peter Zumthor's, *Thinking Architecture*; Florian Aicher's, *on the Path to Building* and Richard Sennett's, *The Craftsman*. The importance of craftmanship and workmanship of risk was established, creating the theoretical framework of this thesis. Following that, the meticulous research creation process focused around making was started. The groundwork for the physical experimentation is laid out in a review of the joinery, that lead into physically making some of them. In that making process, a curiosity was sparked in friction fitted joinery. From there, the rest of my making research was focused on it, resulting in my main design parameter I set for myself for the workbench to be made without glue or metal fasteners.

Leading into the next chapter, the exploration into craft at a furniture scale is investigated, more specifically pertaining to the workbench. The design process of the workbench is picked apart and laterally applied to the ways it informs the design and construction process of the final architectural project. Furthermore, following along the making process and the lessons learned regarding craftsmanship and the joinery was then applied to architecture and the detailed connections to be shown off in the woodshop. Through the methodology of learning through making, I was able to understand just how diverse and dynamic wood is, with its many imperfections. I was able to learn how to work with the expansion and contraction of the material while celebrating the inherit diversity in the material through workmanship of risk, creating a sense of craft.

Then switching research methods, a focus into timber framing architecture was explored. This was done through a case study based research process, more specifically working through a series of exploded isometric drawings showing the different buildings and connections being assembled. In creating these drawings, I was able to learn about the assembly processes of these buildings in a more complex and holistic way. A hand crafting oriented workshop was investigated as it most successfully lends itself to therapy through making. To further reinforce that this practice is a credible form of

treatment, occupational therapy was used as an example as it uses therapy through making.[1]

Continuing in the direction of making as a form of therapy, this perspective was then used to site the building in the downtown of Sudbury, putting it in proximity of services that help someone who is struggling with the state of their mental health. Allowing the program of the building to not operate as a clinical model but as an inclusive space where anyone can benefit from the positive mental health effects from making as a form of therapy. Building off that, the community oriented woodshop program was presented as a feasible model that works with the makers and the community of Sudbury as a whole, creating a centralized maker culture in the downtown. The design was presented and look at more thoroughly, brining attention to the specific architectural interventions that make this project so unique.

There are many moments where the woodshop was inspired and informed by the workbench seen in *figure 6.01*. The use of the custom deconstructed DLT panels above the partially covered outdoor market space adjacent to the west side of the building and the street is one such example. The parking/market stalls are also another example, especially with how they celebrated the workmanship or risk. The detailed planning and understanding of how the structure is assembled is another example where the construction process of the workbench informed the design of the final project. The most significant would be the wood chandelier in the centre of the woodshop.

As a methodology driven thesis, the primary method is learning through making, focusing on the design and construction of an intricate workbench. This thesis analysed how the design and craft of furniture can inspire and inform contemporary wood architecture at varying scales, drawing from Settler, Japanese and Contemporary Canadian timber framing to create an intricately designed building. This sense of craft is what is being manifested in the final design of this thesis, focused on improving the well being of people and fostering a maker culture in downtown Sudbury.

Figure 6.01

ENDNOTES

1 Jennifer Fortuna, “The Art and Process of Wood Carving as a Meaningful Occupation,” The Open Journal of Occupational Therapy 7, no. 2 (n.d.), https://doi.org/10.15453/2168-6408.1616, 2.

Figure 7.00

07

BIBLIOGRAPHY

Thank you!

Remember, wood Is good.

ARCHITECTURAL THEORY:

Aicher, Florian. Gion A. Caminada on the Path to Building: A conversation about architecture with Florian Aicher. Boston, MA: Burkhouse Verlag, 2018.

Pye, David. The Nature and Art of Workmanship. Cambridge: Cambridge Univer sity Press, 1978.

Sennett, Richard. The Craftsman. New Haven: Yale University Press, 2008.

Schwarz, Christopher. The Anarchist's Workbench. Covington, KY: Lost Art Press LLC, 2020.

Zumthor, Peter. Peter Zumthor Thinking Architecture. Basel: Birkhäuser, 2017.

CONCEPTUAL PRECEDENTS:

"Localarchitecture." LOCALARCHITECTURE. Accessed February 22, 2022. https://localarchitecture.ch/.

"Tardio Architecte." DJURIC. Accessed February 22, 2022. https://www.djuric-tar dio.com/.

FURNITURE & JOINERY:

Brown, Azby. The Genius of Japanese Carpentry - Secrets of an Ancient Craft. Tuttle Shokai Inc, 2014.

Graubner, Wolfram. Encyclopedia of Wood Joints. Newtown: The Taunton Press, 1998.

Olesen, Holmsted Christian. The Danish Chair: An International Affair. Copenha gen: Strandberg Publishing, 2018.

Sato, Hideo, and Yasuo Nakahara. The Complete Japanese Joinery. Point Rob erts, WA: Hartley & Marks, 1998.

Seike, Kiyoshi, Yuriko Yobuko, and Rebecca M. Davis. The Art of Japanese Join ery. Boul-der: Weatherhill, 2019.

SUPPLEMENTARY INFORMATION:

"Didactic Definition & Meaning." Merriam-Webster. Merriam-Webster. Accessed February 8, 2022. https://www.merriam-webster.com/dictionary/didactic.

SUSTAINABILITY, PREFABRICATION & TECHNICAL INFORMATION:

Brownell, Blaine Erickson. Material Strategies: Innovative Applications in Architec ture. 1st ed. Architecture Briefs The Foundations of Architecture. New York, NY: Princeton Ar-chitectural Press, 2012.

Ibañez Daniel, Jane Hutton, and Kiel Moe. Wood Urbanism: From the Molecular to the Ter-ritorial. New York: Actar Publishers, 2019.

Jones, Susan. Mass Timber: Design and Research. Novato, CA: ORO Editions, 2019.

Mullins, E. J., and T. S. McKnight, eds. Canadian Woods, Their Properties and Uses. 3rd ed. Toronto ; Buffalo: Published by University of Toronto Press, in cooperation with the Canadian Forestry Service, Environment Canada, and the Canadian Govt. Pub. Center, Supply and Services Canada, 1981.

Stanton, C. R., and R. J. Bourchier. "Forest Regions." The Canadian Encyclope dia, March 7, 2006. https://www.thecanadianencyclopedia.ca/en/article/forest-regions.

THERAPY THROUGH MAKING:

Avery, Jonathan D. The Opioid Epidemic and the Therapeutic Community Model. New York, NY: Weill Cornell Medical College, 2019.

Devlin, Alison M., and Daniel Wight. "Mechanisms and Context in the San Patri gnano Drug Recovery Community, Italy: A Qualitative Study to Inform Transfer to Scotland." Drugs: Education, Prevention and Policy 28:1 (n.d.): 85–96. https://doi.org/10.1080/09687637.2020.1747397.

Fortuna, Jennifer. "The Art and Process of Wood Carving as a Meaningful Occu pation." The Open Journal of Occupational Therapy 7, no. 2 (n.d.). https://doi.org/10.15453/2168-6408.1616.

Horghagen, Sissel. “The Use of Craft Activities as an Occupational Therapy Treat ment Modality in Norway during 1952–1960.” Occupational Therapy Inter national 14, no. 1 (2007): 42–56. https://doi.org/10.1002/oti.222.

Smith, Monica. “Carpentry: an Unlikely Asset in Addiction and Anxiety Recovery.” Anxiety Resource Center, November 15, 2018.

“The Healing Power of ‘Bello’ - San Patrignano Drug Rehabilitation in Italy.” The Crafts-manship Initiative, October 23, 2021. https://craftsmanship.net/the-healing-power-of-bello/.

WOOD CONSTRUCTION:

Clayton, Maurice J. Canadian Housing in Wood: An Historical Perspective. Otta wa: Canada Mortgage and Housing Corporation, 1990.

Engel, Heino. Measure and Construction of The Japanese House: Contains 250 Floor plans and sketches, plus illustrated aspects of joinery. Rutland, Ver mont USA.: Tuttle, 1985.

Bernheimer, Andrew. Timber in the City: Design and Construction in Mass Timber. 1st ed. San Fracisco Bay Area u.a.: Oro Ed., 2015.

Nishimaki, Atsuko, and Yudai Okamoto. Wood Architecture in the Expanded Field: Ki No Ketchikan. Tokyo: Shinkenchiku-Sha Co., 2013.

“StructureCraft DLT Design & Profile Guide © V4.1 - USA.” StructureCraft: Timber Engi-neering & Construction. Accessed January 10, 2022. www.Structure Craft.com.

WORKSHOPS & MAKER CULTURE:

“Home.” The Unplugged Woodshop, September 19, 2021. https://www.theun pluggedwoodshop.com/.

“Woodshop in Downtown Ottawa Offering Memberships and Education.” Otta wa City Woodshop. Accessed December 23, 2021. https://ottawacity woodshop.com/.